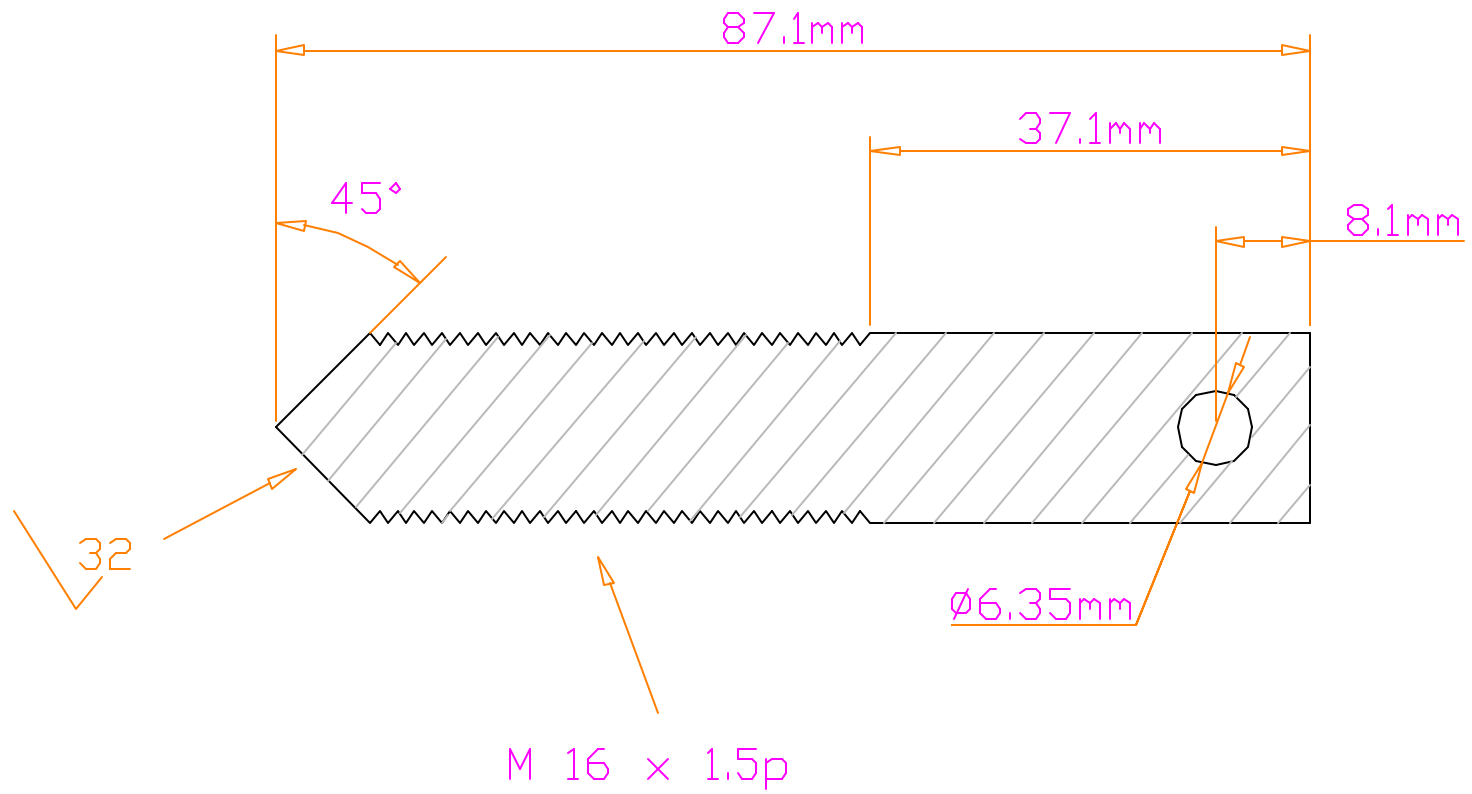

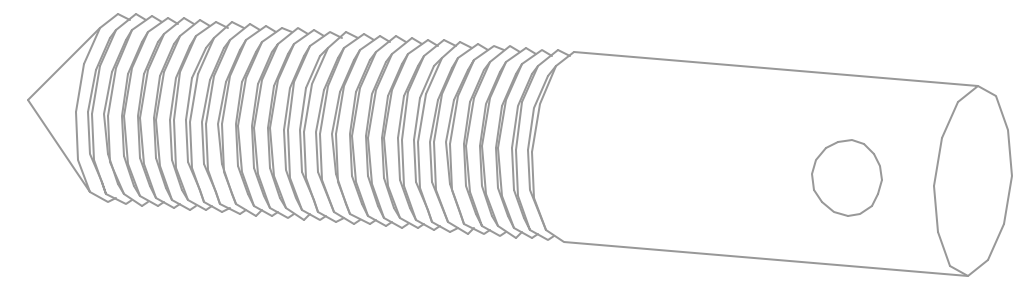

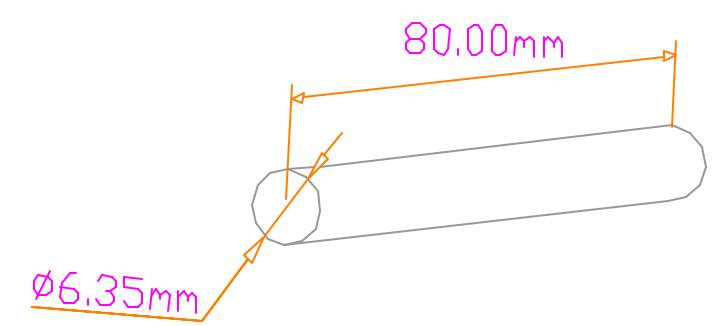

UNLESS OTHERWISE SPECIFIED: DIMENSIONS ARE IN mm [inch] TOLERANCES DECIMALS X ± .25 mm .X ± .13 mm .XX ± .05 mm .XXX ± .03 mm ANGULAR ± 0.5° DO NOT SCALE DRAWING	Lawrence Berkeley National Laboratory ATLAS PP1 Assembly Tools Flair Tool Mandrel		
DATE NEEDED NA			
SURFACE TREATMENT NICKEL PLATE	DWG NO. ag0497b	REV –	REV DATE 16 Oct 03
PART / NO. REQ'D	DRAWN BY Fred Goozen		PHONE 510 486 6924
497b / 1	START DATE 16 Oct 03		FAX 510 486 7111
0 / 00	LAST CHANGED 24 Nov 03		E-MAIL FRGoozen@lbl.gov
0 / 00	MATERIAL STEEL –		ACCOUNT P 1 AS 33