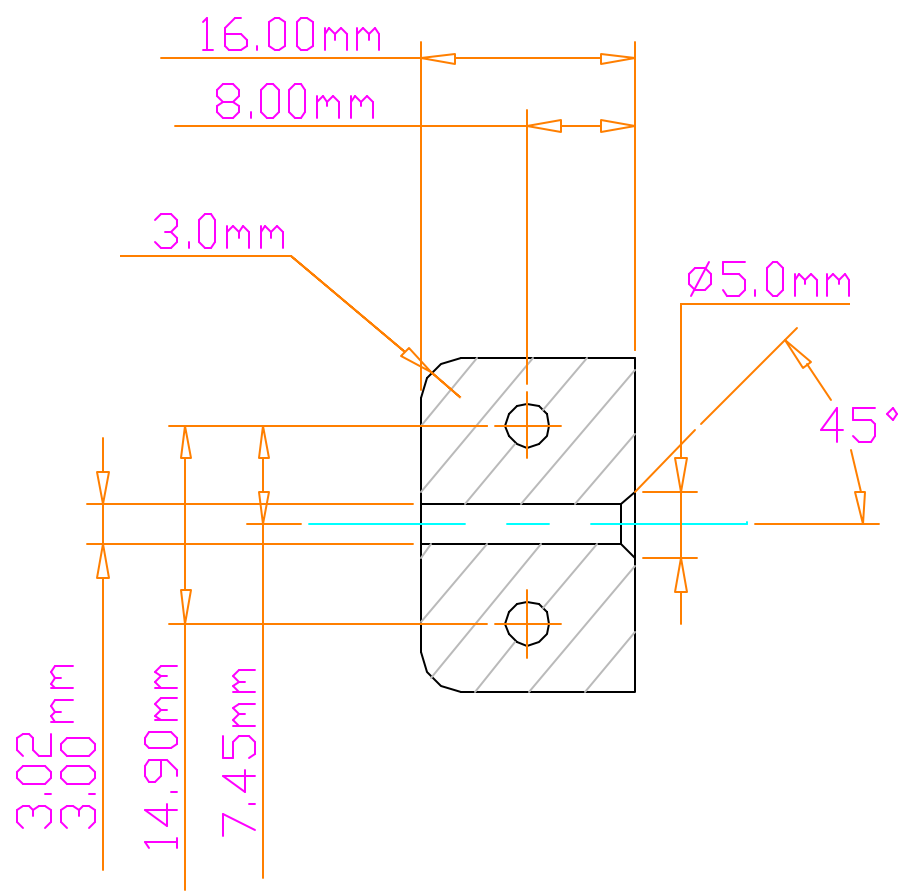

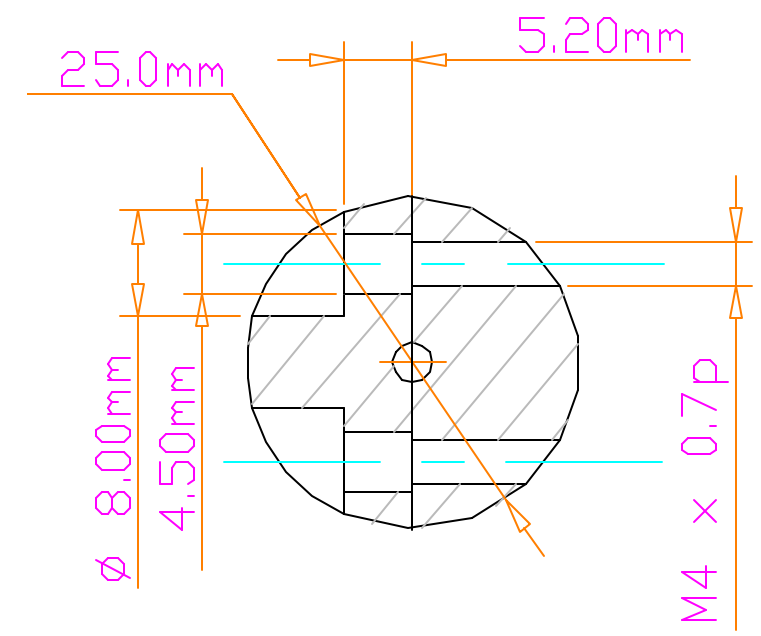

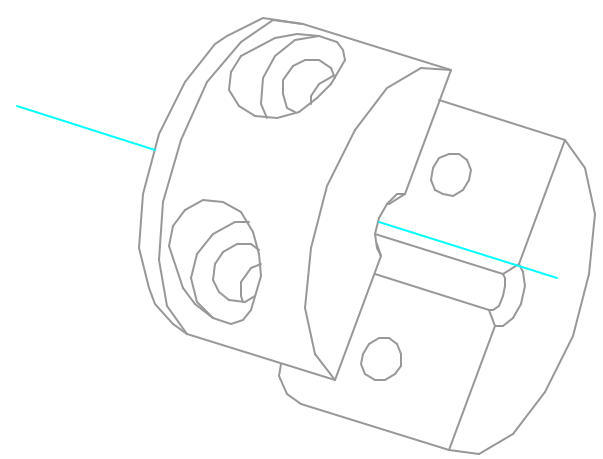

UNLESS OTHERWISE SPECIFIED:
DIMENSIONS ARE IN mm [inch]
TOLERANCES

DECIMALS	ANGULAR
X ± .25 mm	± 0.5°
.X ± .13 mm	
.XX ± .05 mm	
.XXX ± .03 mm	

DO NOT SCALE DRAWING

Lawrence Berkeley National Laboratory

ATLAS
PP1 Assembly Tools
Flair Tool
Chuck for 3.00mm Tube

DATE NEEDED: NA			
SURFACE TREATMENT: Nickel plate	DWG NO.: ag0496	REV: –	REV DATE: 25 Nov 03
PART	NO. REQ'D	DRAWN BY: Fred Goozen	PHONE: 510 486 6924
0	00	START DATE: 16 Oct 03	FAX: 510 486 7111
0	00	LAST CHANGED: 25 Nov 03	E-MAIL: FRGoozen@lbl.gov
0	00	MATERIAL: Steel –	ACCOUNT: P 1 AS 33