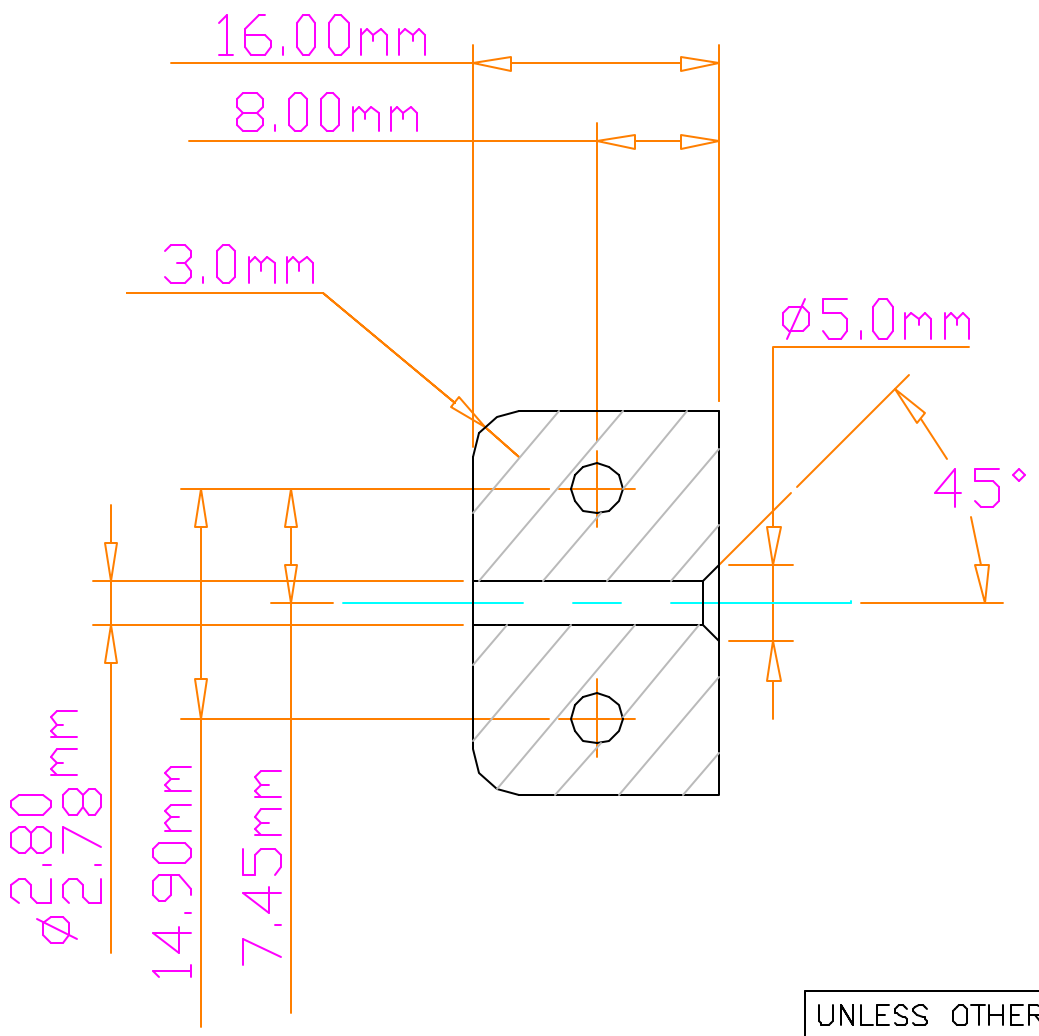

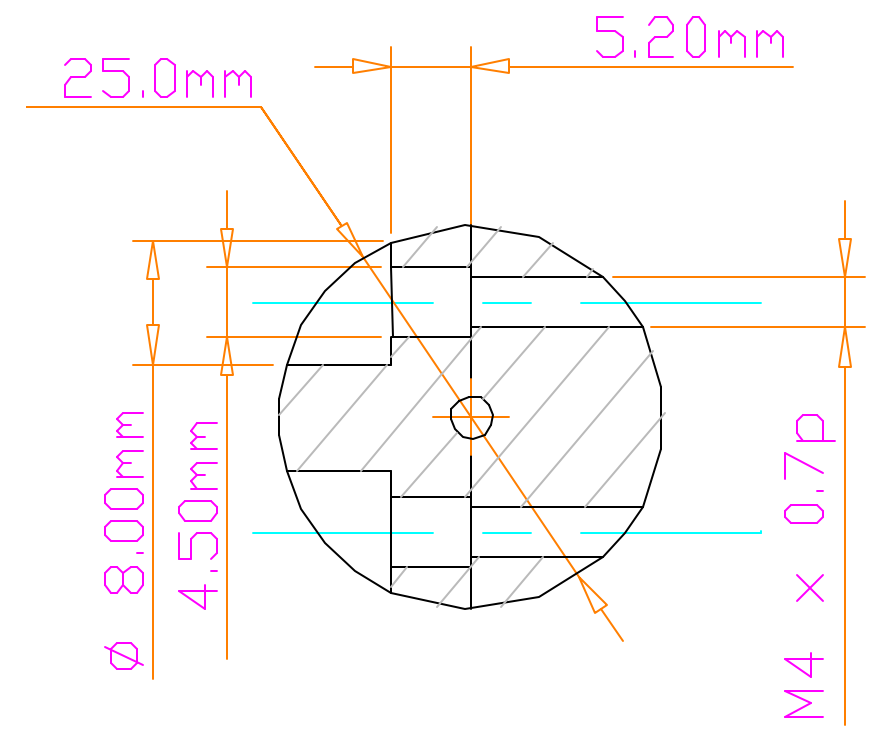

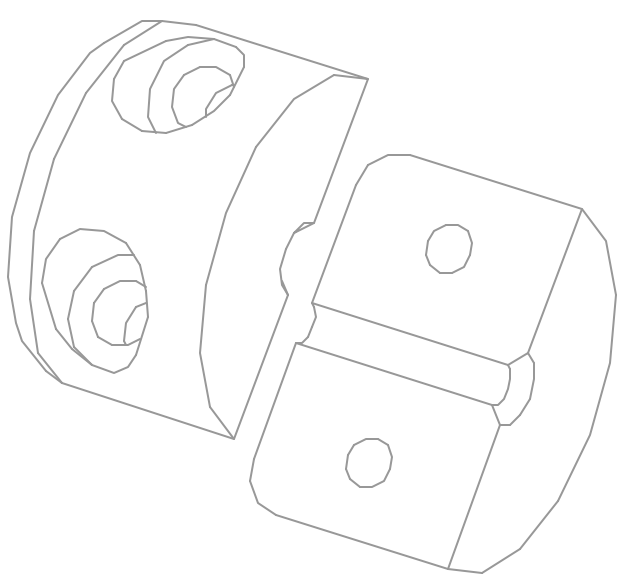

UNLESS OTHERWISE SPECIFIED: DIMENSIONS ARE IN mm [inch] TOLERANCES DECIMALS: X ± .25 mm; .X ± .13 mm; .XX ± .05 mm; .XXX ± .03 mm; ANGULAR ± 0.5° DO NOT SCALE DRAWING	Lawrence Berkeley National Laboratory		
DATE NEEDED NA	ATLAS PP1 Assembly Tools Flair Tool Chuck for 2.78mm tube		
SURFACE TREATMENT NICKEL PLATE	DWG NO. ag0495	REV –	REV DATE 1 Dec 03
PART / NO. REQ'D	DRAWN BY Fred Goozen	PHONE 510 486 6924	
495 / 1	START DATE 16 Oct 03	FAX 510 486 7111	
0 / 00	LAST CHANGED 1 Dec 03	E-MAIL FRGoozen@lbl.gov	
0 / 00	MATERIAL STEEL –	ACCOUNT P 1 AS 33	