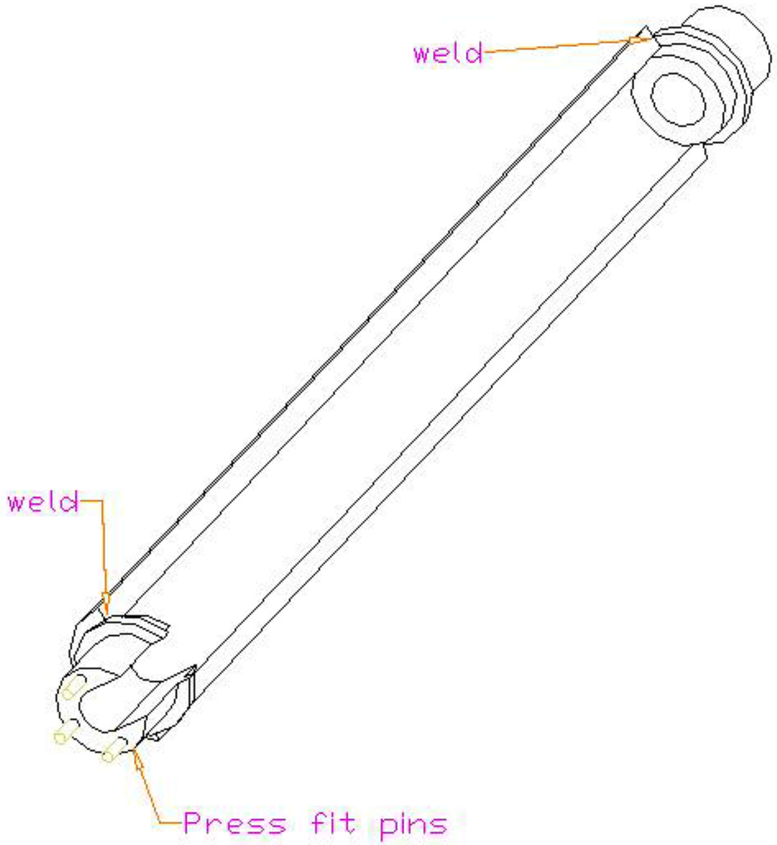

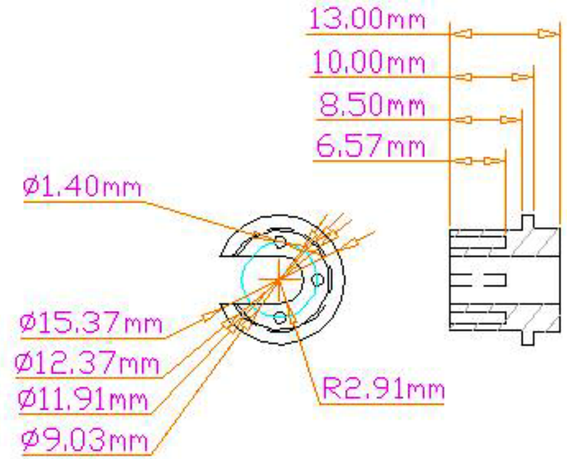

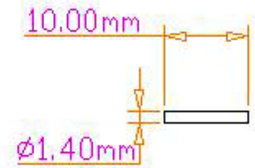

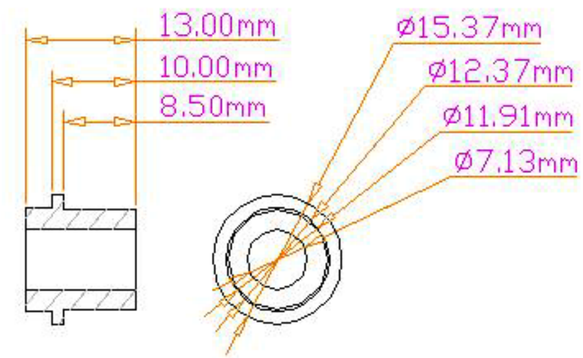

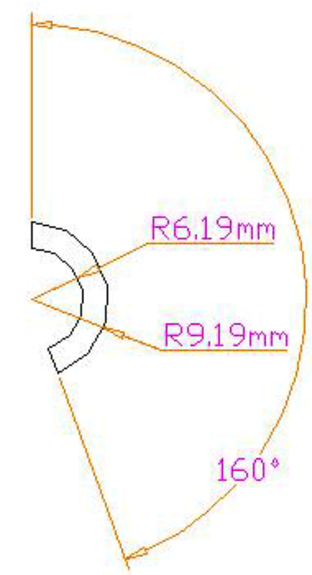

UNLESS OTHERWISE SPECIFIED: DIMENSIONS ARE IN mm [inch] TOLERANCES DECIMALS: X ± .25 mm, .X ± .13 mm, .XX ± .05 mm, .XXX ± .03 mm ANGULAR ± 0.5° DO NOT SCALE DRAWING	Lawrence Berkeley National Laboratory ATLAS PP1 Cooling Supply and Return Bellows to Bulkhead (M14) Wrench		
DATE NEEDED NA			
SURFACE TREATMENT NICKER PLATE	DWG NO. ag0491	REV —	REV DATE 25 Jun 03
PART / NO. REQ'D	DRAWN BY Fred Goozen		PHONE 510 486 6924
491 / 1	START DATE 25 Jun 03		FAX 510 486 7111
-- / --	LAST CHANGED 27 Jun 03		E-MAIL FRGoozen@lbl.gov
0 / 00	MATERIAL Steel ---		ACCOUNT P 1 AS 33