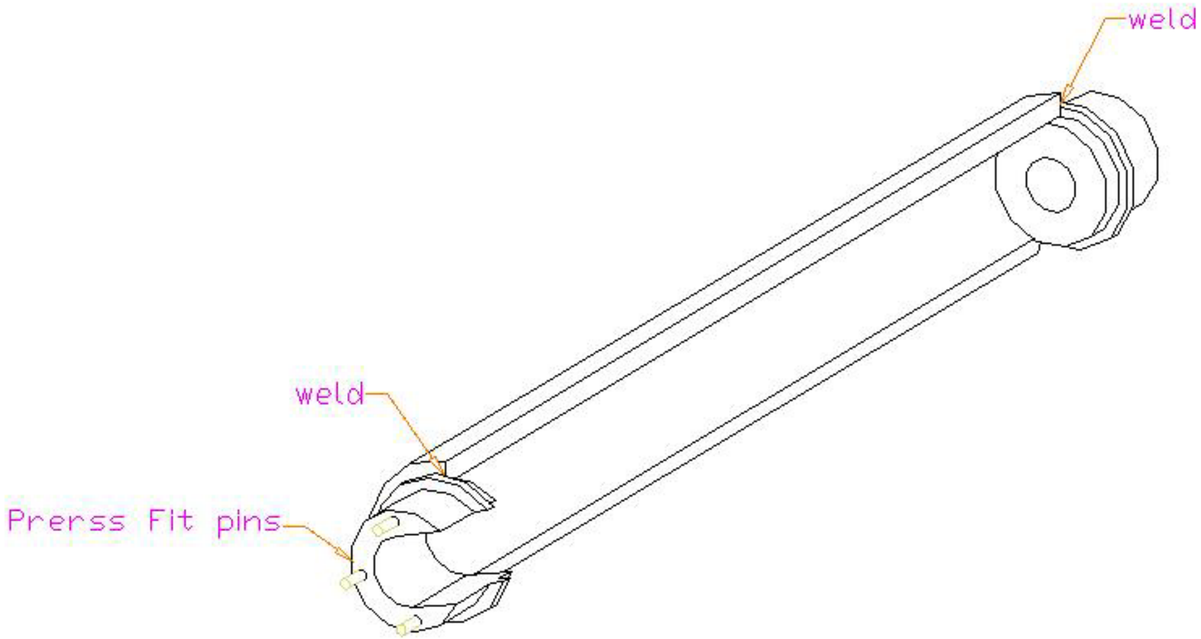


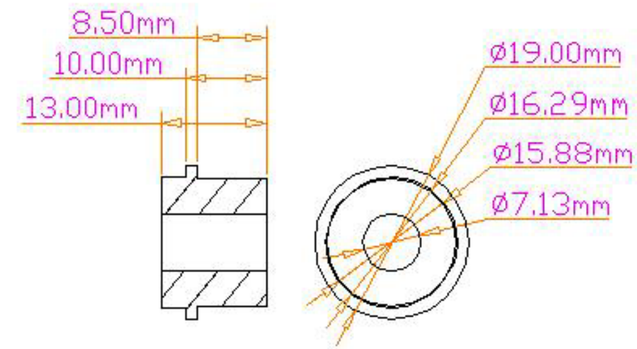


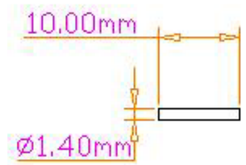


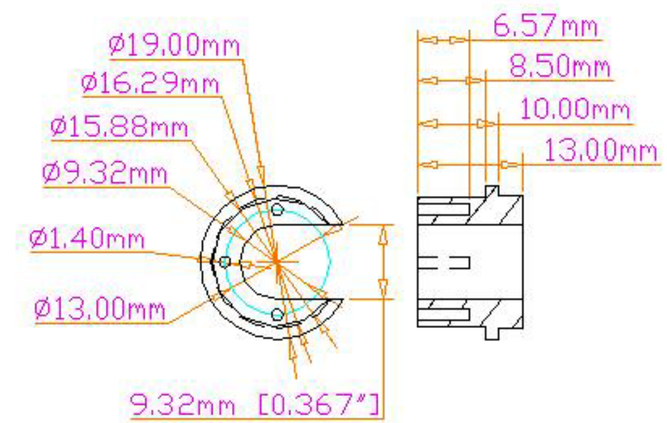


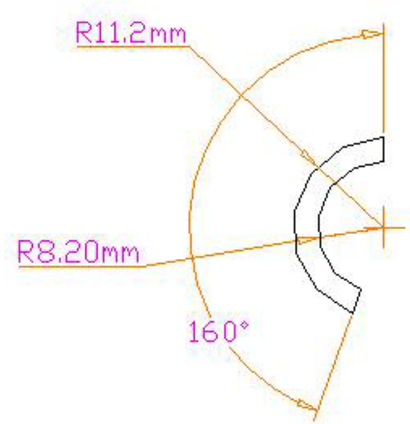


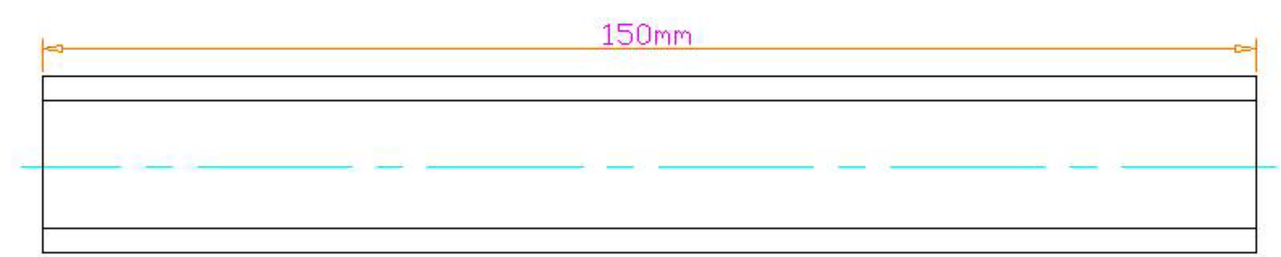


| | | | |
|---|---|---|---|
| UNLESS OTHERWISE SPECIFIED: DIMENSIONS ARE IN mm [ inch ] TOLERANCES DECIMALS: X ± .25 mm, .X ± .13 mm, .XX ± .05 mm, .XXX ± .03 mm; ANGULAR ± 0.5° DO NOT SCALE DRAWING | Lawrence Berkeley National Laboratory | | |
| DATE NEEDED NA | ATLAS PP1 Cooling Return Bellows to Bulkhead ( M18 ) Wrench | | |
| SURFACE TREATMENT NICKEL PLATE | DWG NO. ag0490 | REV – | REV DATE 25 Jun 03 |
| PART / NO. REQ'D | DRAWN BY Fred Goozen | | PHONE 510 486 6924 |
| 490 / 1 | START DATE 25 Jun 03 | | FAX 510 486 7111 |
| 0 / 0 | LAST CHANGED 25 Jun 03 | | E-MAIL FRGoozen@lbl.gov |
| 0 / 00 | MATERIAL Steel --- | | ACCOUNT P 1 AS 33 |