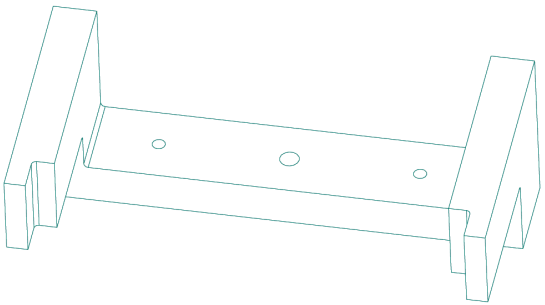

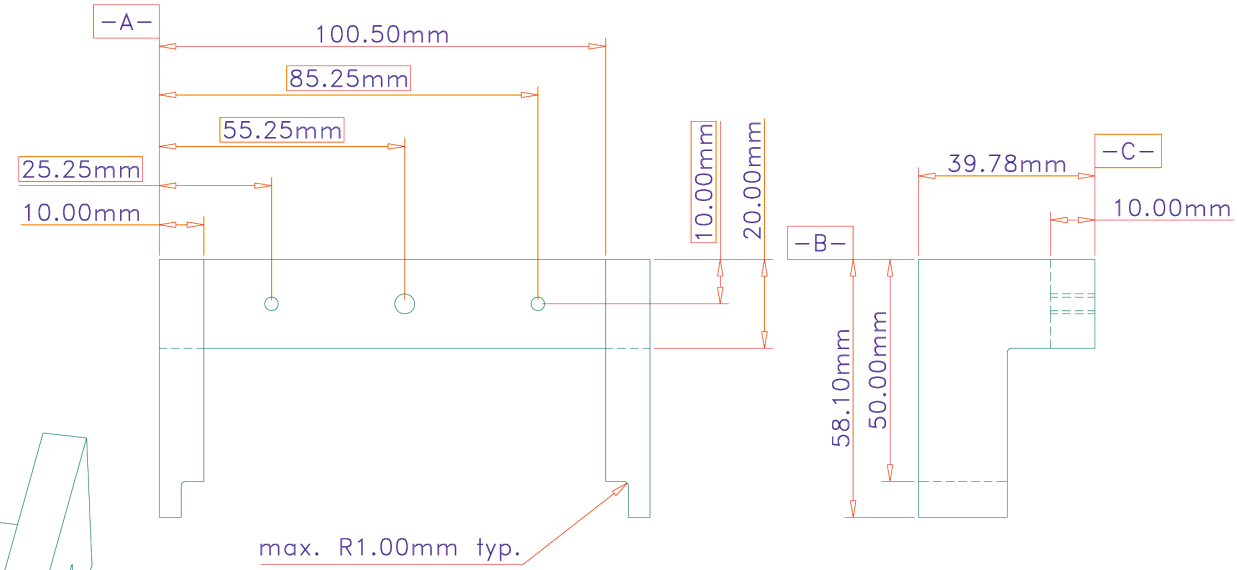

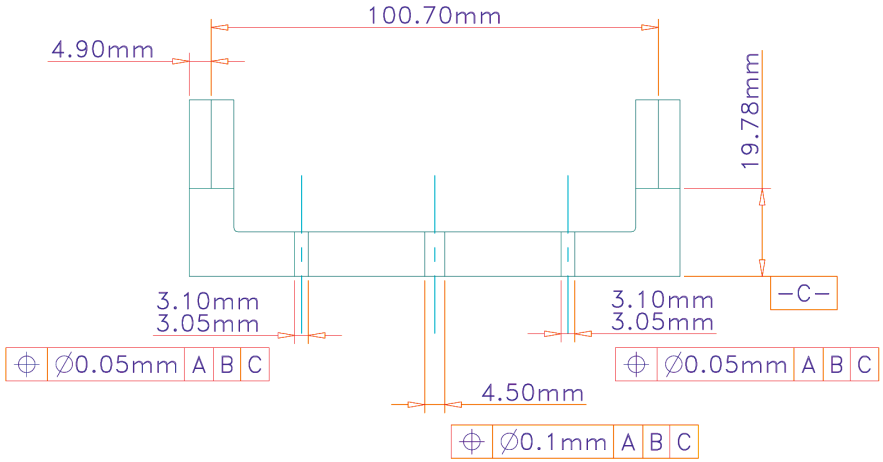

UNLESS OTHERWISE SPECIFIED:
DIMENSIONS ARE IN mm [inch]
TOLERANCES
DECIMALS ANGULAR
X ± .25 mm ± 0.5°
.X ± .13 mm
.XX ± .05 mm
.XXX ± .03 mm
DO NOT SCALE DRAWING

Lawrence Berkeley National Laboratory

ATLAS
Pixal Assembly Fixtures
Hybird Frame
Vac Chuck Guide

DATE NEEDED: NA			
SURFACE TREATMENT: NA	DWG NO. ag0488	REV –	REV DATE 5 Jun 03
PART	NO. REQ'D	DRAWN BY Fred Goozen	PHONE 510 486 6924
B	1	START DATE 5 Jun 03	FAX 510 486 7111
0	00	LAST CHANGED 6 Jun 03	E-MAIL FRGoozen@lbl.gov
0	00	MATERIAL Aluminum –	ACCOUNT P 1 AS 33