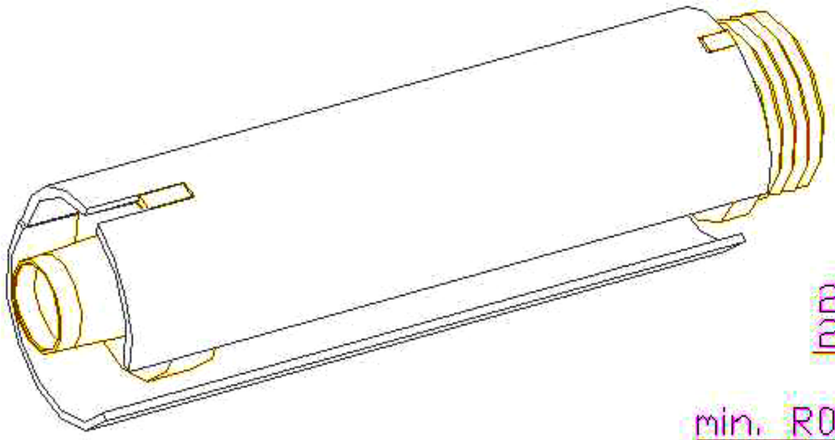

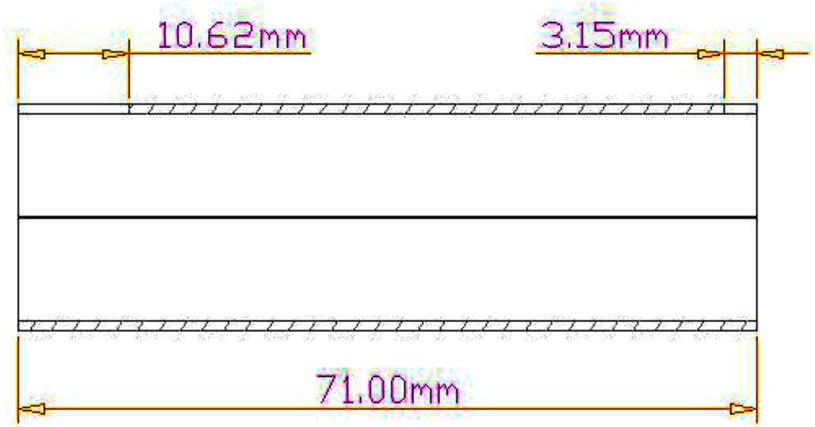

UNLESS OTHERWISE SPECIFIED: DIMENSIONS ARE IN mm [inch] TOLERANCES DECIMALS: X ± .25 mm, .X ± .13 mm, .XX ± .05 mm, .XXX ± .03 mm; ANGULAR ± 0.5° DO NOT SCALE DRAWING	Lawrence Berkeley National Laboratory		
DATE NEEDED ---	ATLAS PP1 Cooling Supply and Return Bellows Torque Limiter 8.73mm tube		
SURFACE TREATMENT NICKEL PLATE	DWG NO. ag0485b	REV –	REV DATE 28 May 03
PART / NO. REQ'D	DRAWN BY Fred Goozen		PHONE 510 486 6924
0 / 0	START DATE 28 May 03		FAX 510 486 7111
0 / 0	LAST CHANGED 28 May 03		E-MAIL FRGoozen@lbl.gov
0 / 00	MATERIAL STEEL ---		ACCOUNT P 1 AS 33