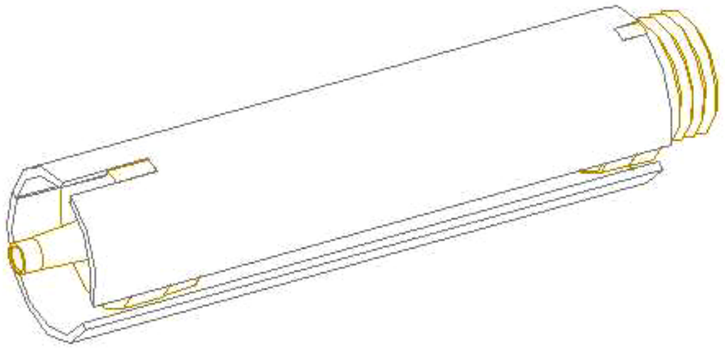

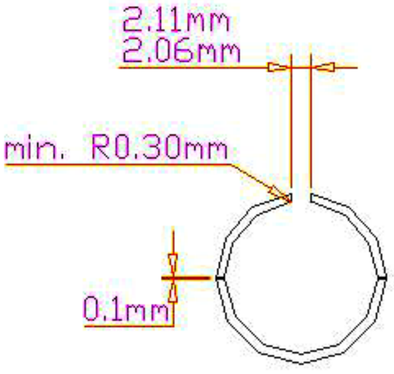

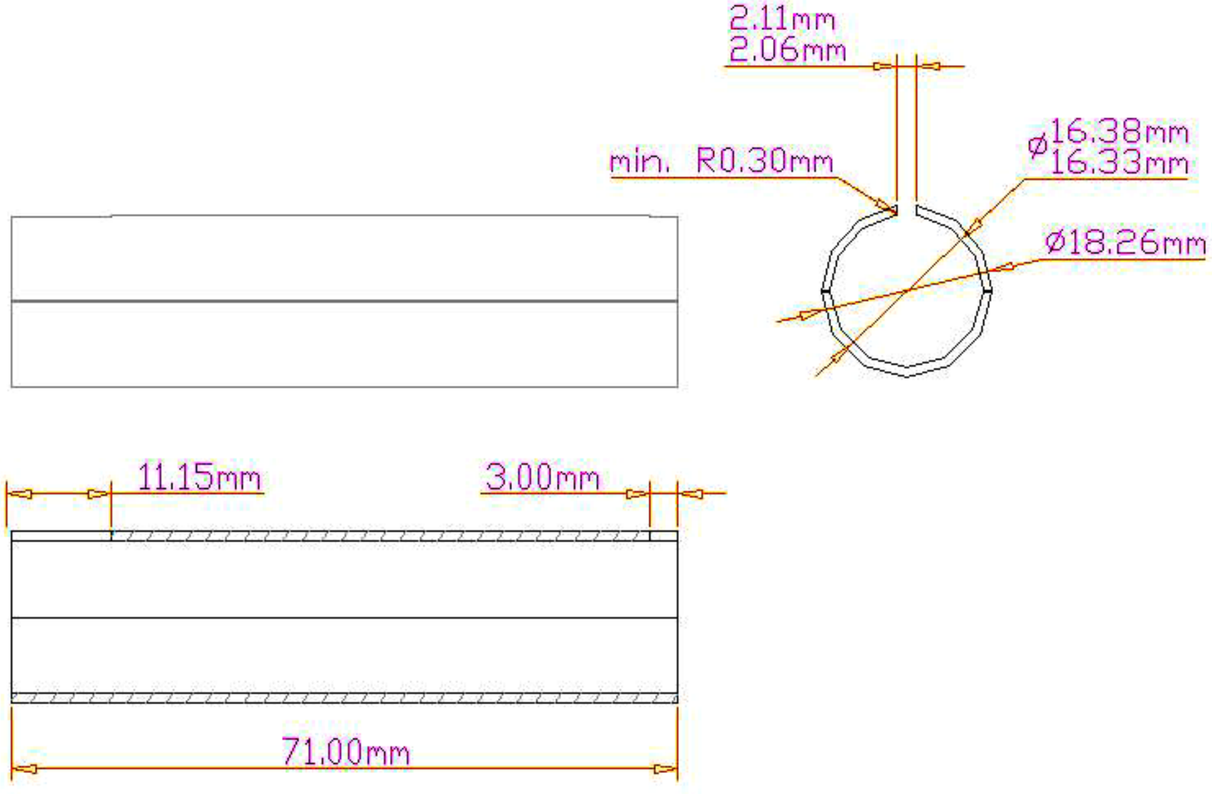

UNLESS OTHERWISE SPECIFIED: DIMENSIONS ARE IN mm [inch] TOLERANCES DECIMALS: X ± .25 mm; .X ± .13 mm; .XX ± .05 mm; .XXX ± .03 mm ANGULAR ± 0.5° DO NOT SCALE DRAWING	Lawrence Berkeley National Laboratory ATLAS PP1 Cooling Supply and Return Bellows Torque Limiter 2.78mm tube
DATE NEEDED –––	
SURFACE TREATMENT: NICKEL PLATE	DWG NO. ag0485a; REV –; REV DATE 28 May 03
PART / NO. REQ'D	DRAWN BY Fred Goozen; PHONE 510 486 6924
0 / 0	START DATE 28 May 03; FAX 510 486 7111
0 / 0	LAST CHANGED 28 May 03; E-MAIL FRGoozen@lbl.gov
0 / 00	MATERIAL STEEL ––– ; ACCOUNT P 1 AS 33