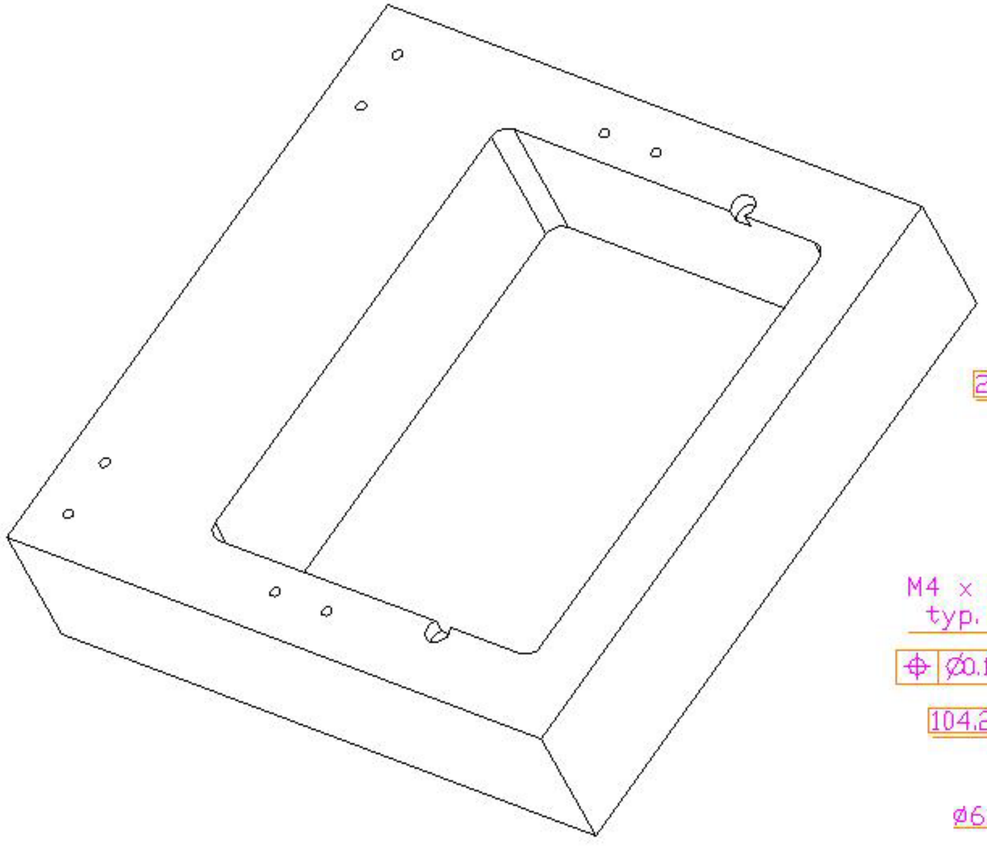

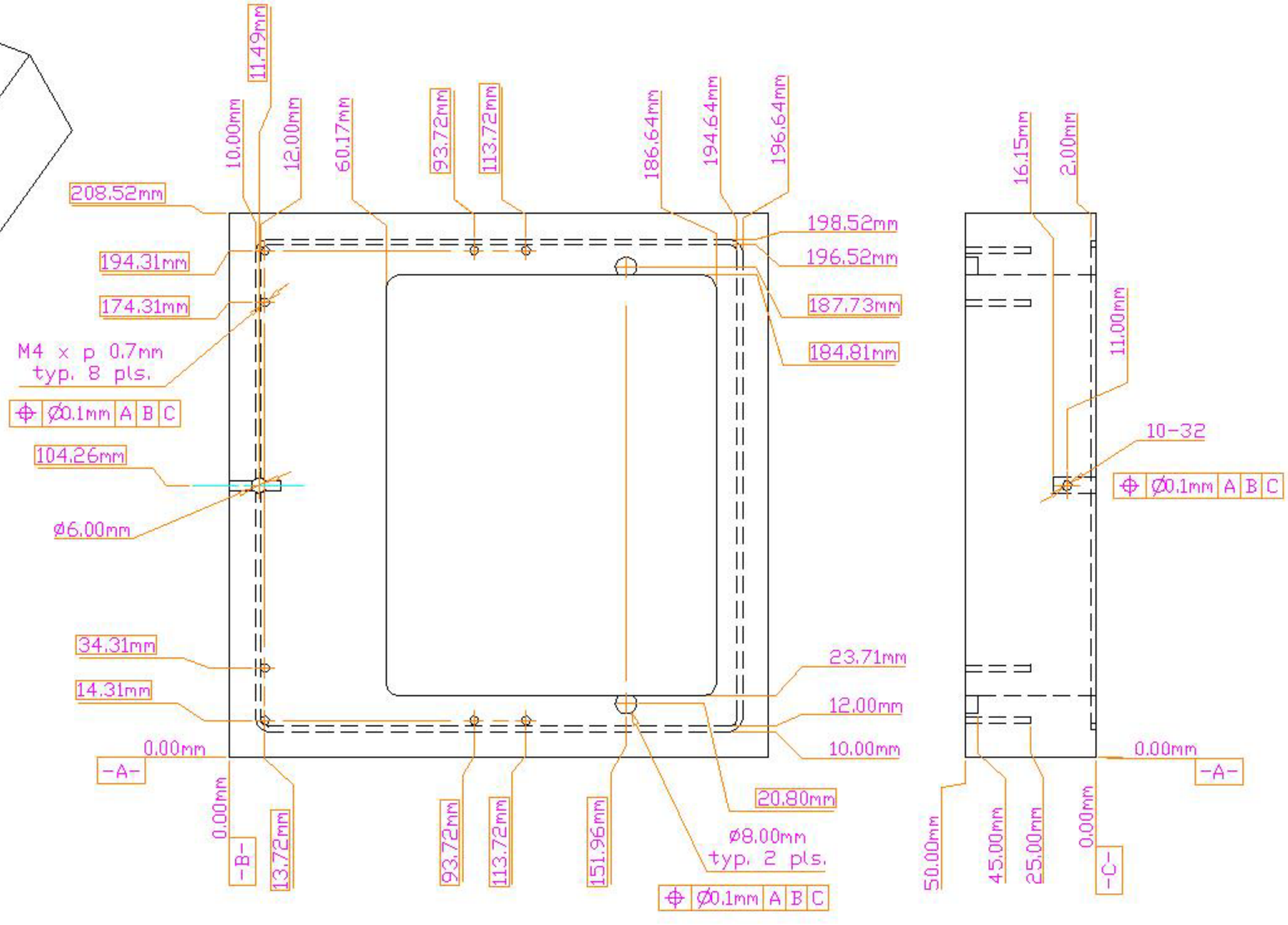

UNLESS OTHERWISE SPECIFIED:
DIMENSIONS ARE IN mm [Inch]
TOLERANCES

DECIMALS	ANGULAR
X ± .25 mm	± 0.5°
.X ± .13 mm	
.XX ± .05 mm	
.XXX ± .03 mm	

DO NOT SCALE DRAWING

DATE NEEDED: NA

SURFACE TREATMENT: NA

Lawrence Berkeley National Laboratory

ATLAS
Pixel Assembly Fixtures
Detector Placement Fixture
Support Vacuum Chuck

PART	NO. REQ'D
482	1
0	00
0	00

DWG NO. ag0482	REV –
REV DATE 13 May 03	
DRAWN BY Fred Goozen	PHONE 510 486 6924
START DATE 13 May 03	FAX 510 486 7111
LAST CHANGED 13 May 03	E-MAIL FRGoozen@lbl.gov
MATERIAL Aluminum –	ACCOUNT P 1 AS 33