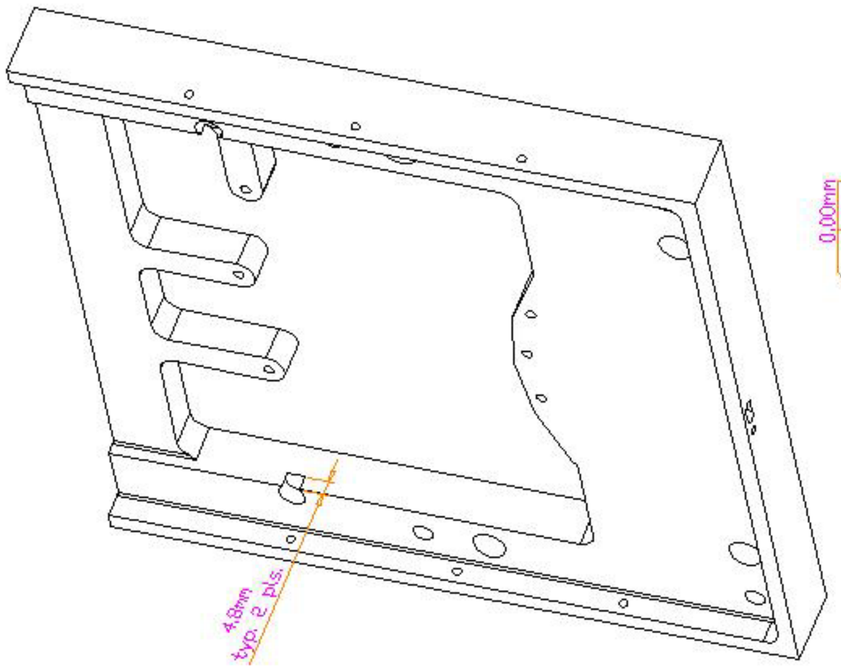

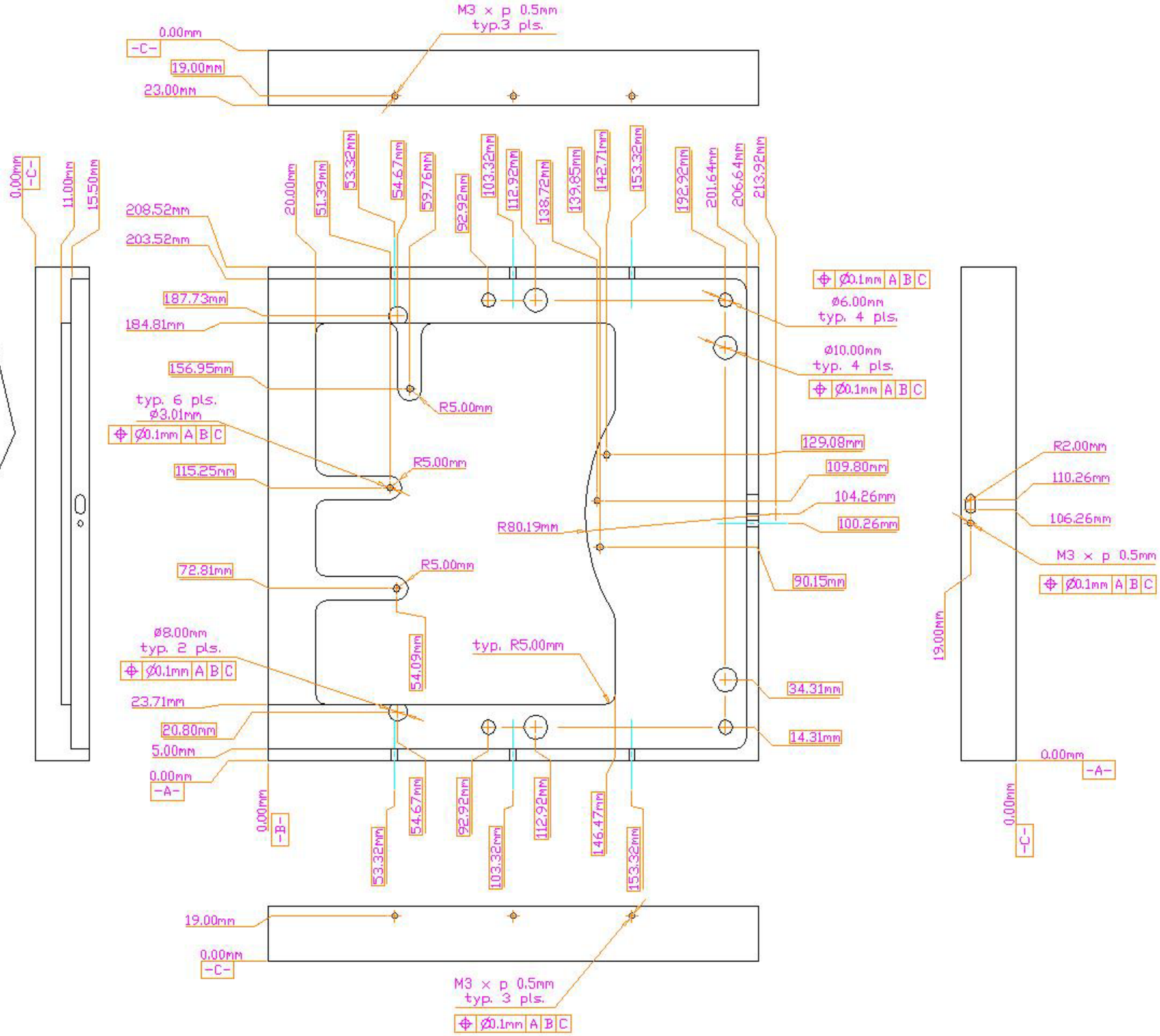

UNLESS OTHERWISE SPECIFIED:
DIMENSIONS ARE IN mm [inch]
TOLERANCES
DECIMALS: X ± .25 mm; .X ± .13 mm; .XX ± .05 mm; .XXX ± .03 mm
ANGULAR: ± 0.5°
DO NOT SCALE DRAWING

Lawrence Berkeley National Laboratory

ATLAS
Pixal Assembly Fixtures
Detector Placement Fixture

DATE NEEDED: NA			
SURFACE TREATMENT: NA	DWG NO.: ag0481	REV: –	REV DATE: 12 May 03
PART: 481	NO. REQ'D: 2	DRAWN BY: Fred Goozen	PHONE: 510 486 6924
		START DATE: 12 May 03	FAX: 510 486 7111
0	00	LAST CHANGED: 12 May 03	E-MAIL: FRGoozen@lbl.gov
0	00	MATERIAL: Aluminum –	ACCOUNT: P 1 AS 33