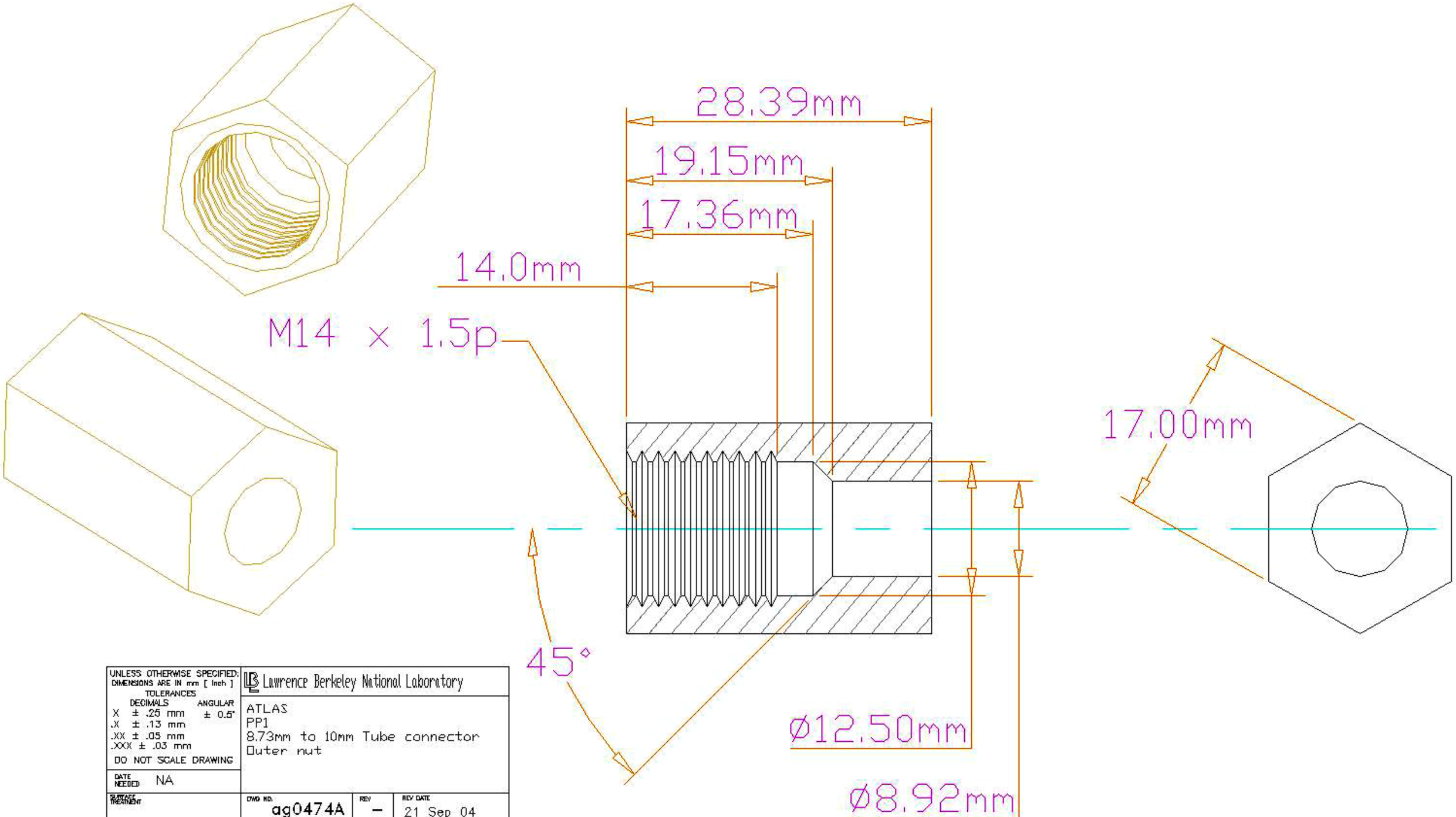

UNLESS OTHERWISE SPECIFIED: DIMENSIONS ARE IN mm [Inch] TOLERANCES DECIMALS: X ± .25 mm, .X ± .13 mm, .XX ± .05 mm, .XXX ± .03 mm ANGULAR ± 0.5° DO NOT SCALE DRAWING	Lawrence Berkeley National Laboratory ATLAS PP1 8.73mm to 10mm Tube connector Outer nut		
DATE NEEDED NA			
SURFACE TREATMENT	DWG NO. ag0474A	REV –	REV DATE 21 Sep 04
PART	NO. REQ'D	DRAWN BY Fred Goozen	PHONE 510 486 6924
474	20	START DATE 20 Nov 02	FAX 510 486 7111
0	00	LAST CHANGED 21 Sep 04	E-MAIL FRGoozen@lbl.gov
0	00	MATERIAL Peek 30% glass filled	ACCOUNT P 1 AS 33