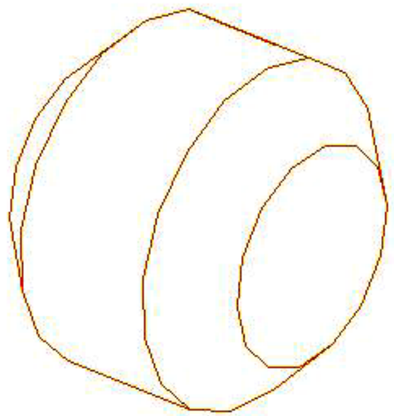

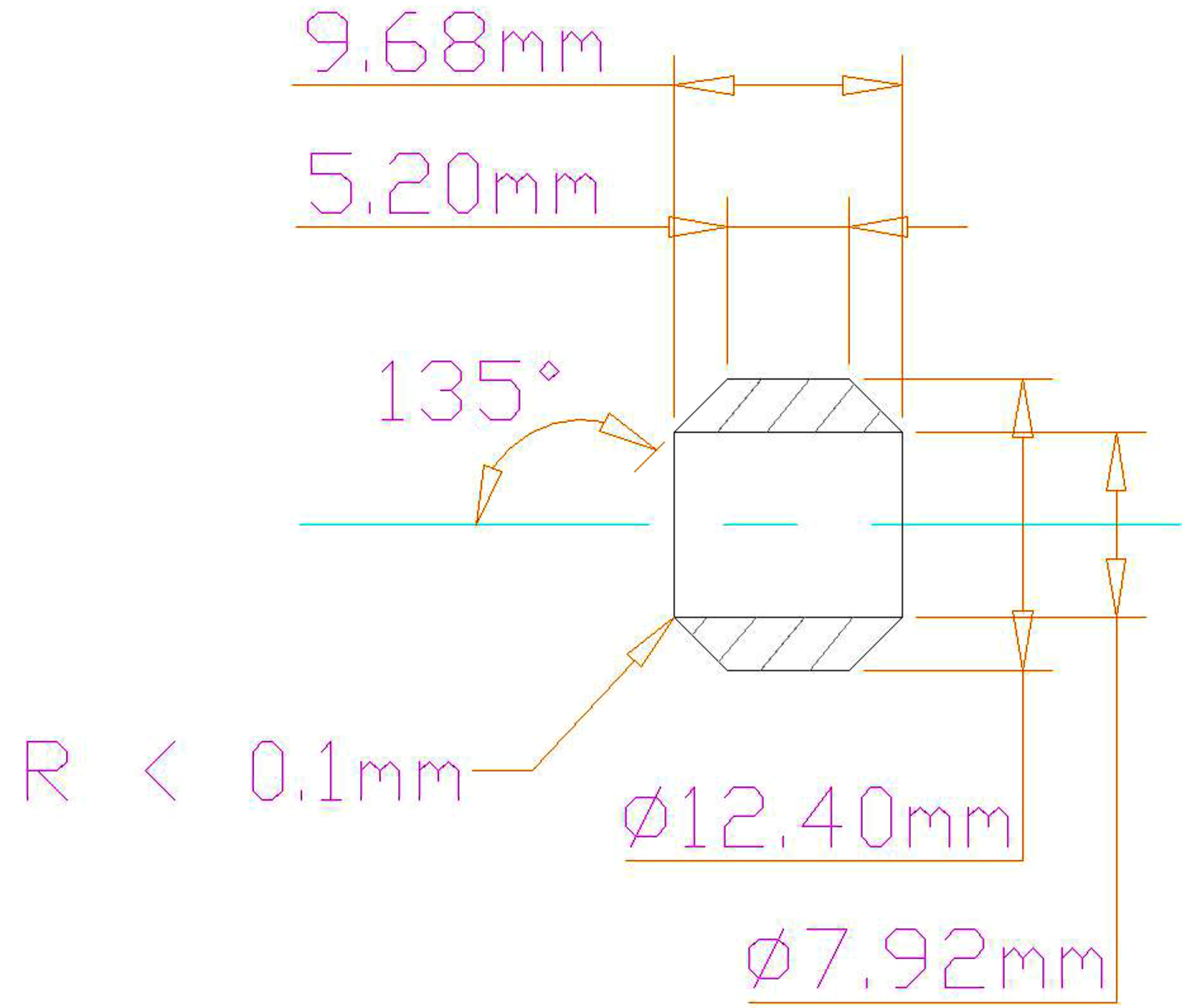


| | |
|---|---|
| UNLESS OTHERWISE SPECIFIED: DIMENSIONS ARE IN mm [ Inch ] TOLERANCES DECIMALS: X ± .25 mm, .X ± .13 mm, .XX ± .05 mm, .XXX ± .03 mm; ANGULAR ± 0.5° DO NOT SCALE DRAWING | Lawrence Berkeley National Laboratory<br>ATLAS<br>PP1<br>8.73mm to 10mm Tube connector<br>Flair bushing |
| DATE NEEDED NA | |
| SURFACE TREATMENT | DWG NO. ag0472A · REV – · REV DATE 22 Sep 04 |
| PART / NO. REQ'D | DRAWN BY Fred Goozen · PHONE 510 486 6924 |
| 472 / 20 | START DATE 20 Nov 02 · FAX 510 486 7111 |
| 0 / 00 | LAST CHANGED 22 Sep 04 · E-MAIL FRGoozen@lbl.gov |
| 0 / 00 | MATERIAL Peek 30% glass filled · ACCOUNT P 1 AS 33 |