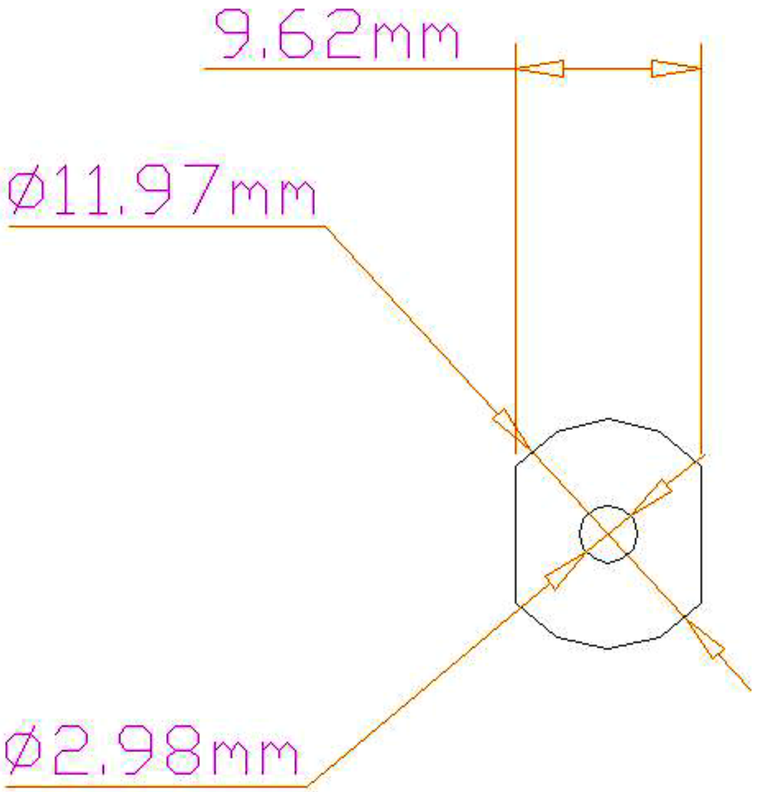

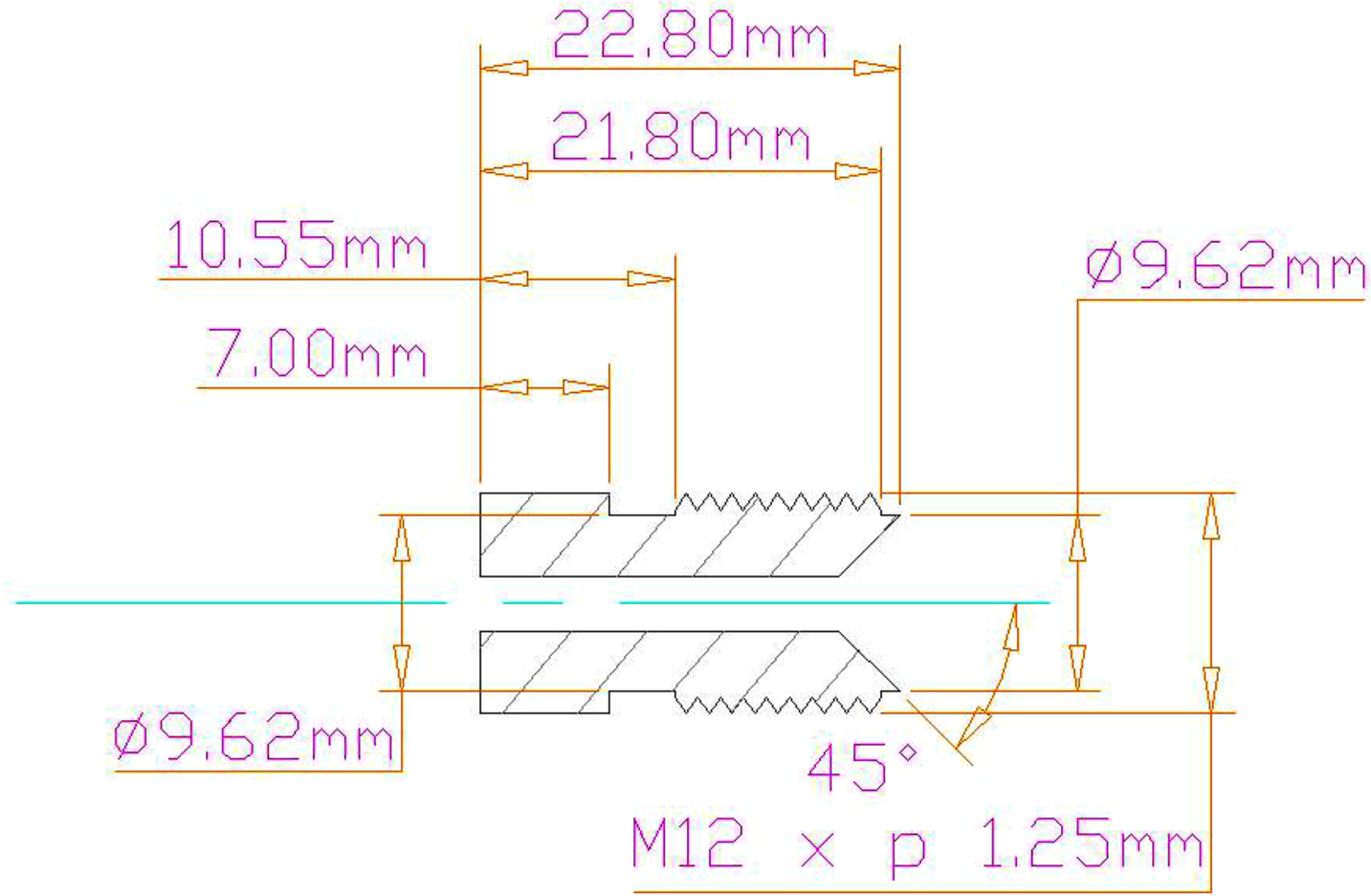

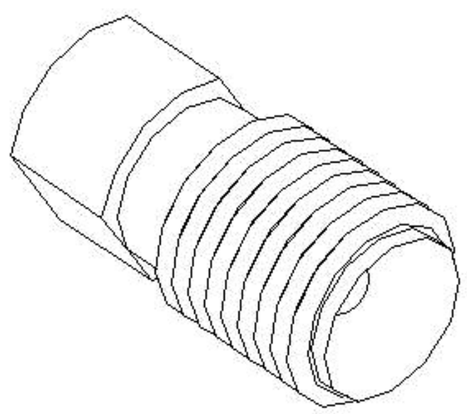

UNLESS OTHERWISE SPECIFIED: DIMENSIONS ARE IN mm [inch] TOLERANCES DECIMALS X ± .25 mm .X ± .13 mm .XX ± .05 mm .XXX ± .03 mm ANGULAR ± 0.5° DO NOT SCALE DRAWING	Lawrence Berkeley National Laboratory		
DATE NEEDED NA	ATLAS PP1 2.78mm Tube connector Flair Inner		
SURFACE TREATMENT	DWG NO. ag0471	REV –	REV DATE 15 Jun 03
PART / NO. REQ'D	DRAWN BY Fred Goozen		PHONE 510 486 6924
471 / 20	START DATE 20 Nov 02		FAX 510 486 7111
0 / 00	LAST CHANGED 15 Jun 03		E-MAIL FRGoozen@lbl.gov
0 / 00	MATERIAL Aluminum 6061-T6		ACCOUNT P 1 AS 33