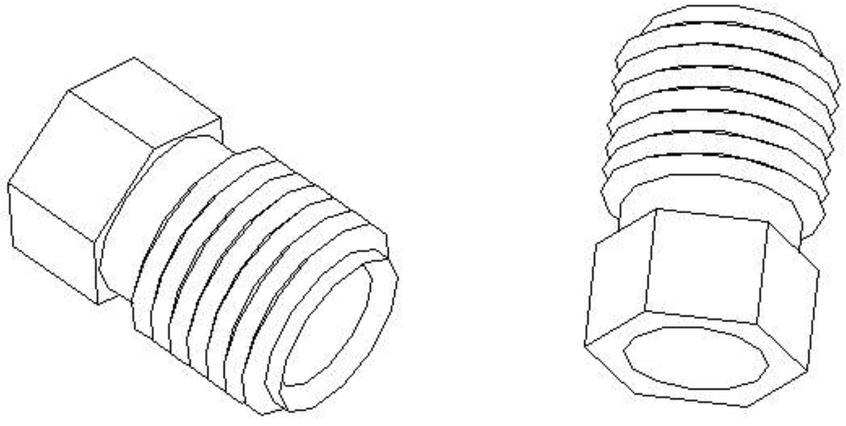

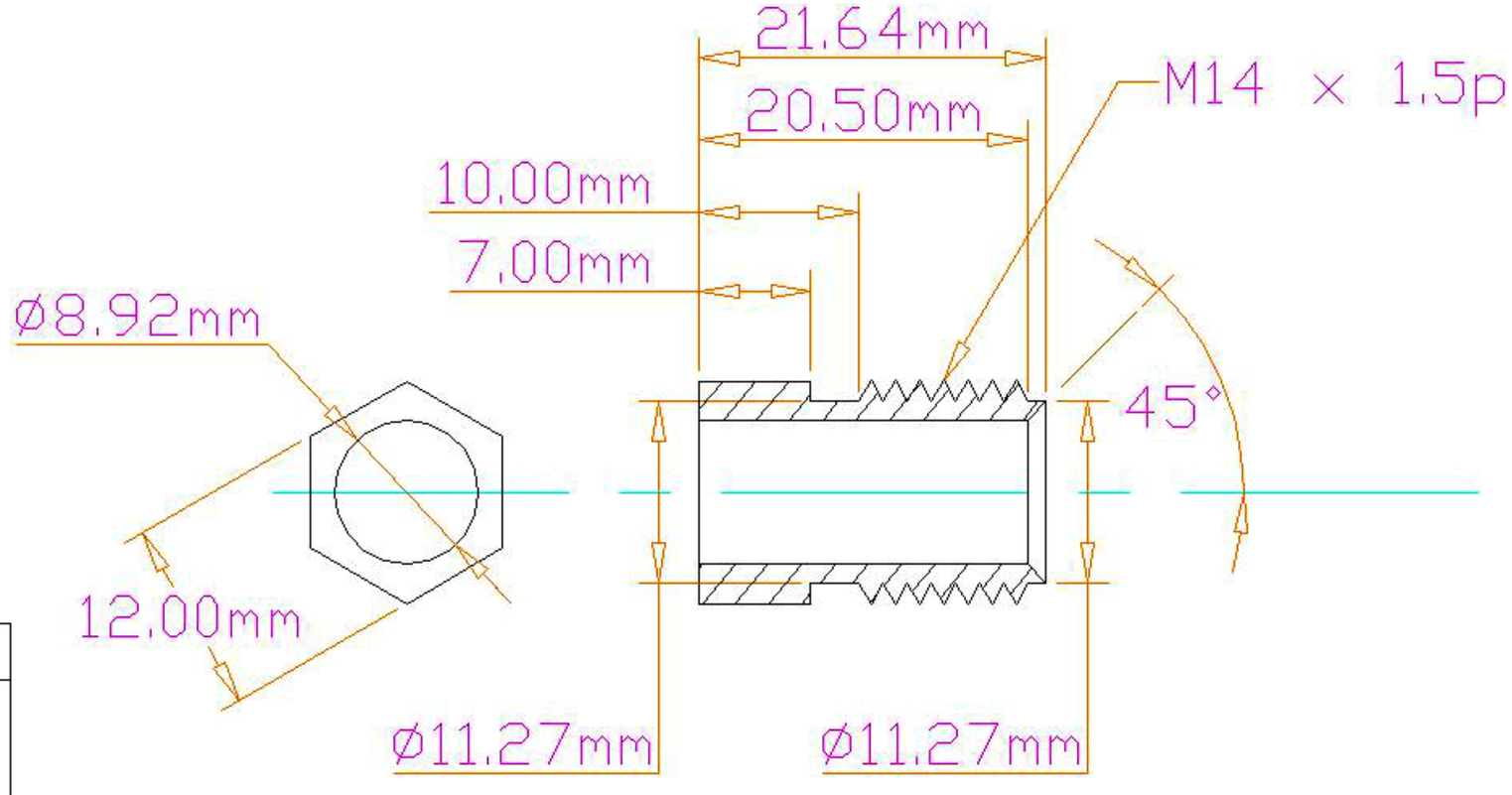

UNLESS OTHERWISE SPECIFIED: DIMENSIONS ARE IN mm [inch] TOLERANCES DECIMALS: X ± .25 mm, .X ± .13 mm, .XX ± .05 mm, .XXX ± .03 mm; ANGULAR ± 0.5° DO NOT SCALE DRAWING	Lawrence Berkeley National Laboratory ATLAS PP1 8.73mm Tube connector Flair Inner
DATE NEEDED: NA	
SURFACE TREATMENT	DWG NO. ag0470 · REV – · REV DATE 15 Jun 03
PART / NO. REQ'D	DRAWN BY: Fred Goozen · PHONE: 510 486 6924
470 / 20	START DATE: 20 Nov 02 · FAX: 510 486 7111
0 / 00	LAST CHANGED: 15 Jun 03 · E-MAIL: FRGoozen@lbl.gov
0 / 00	MATERIAL: Aluminum 6061-T6 · ACCOUNT: P 1 AS 33