Volume 1398 cu mm

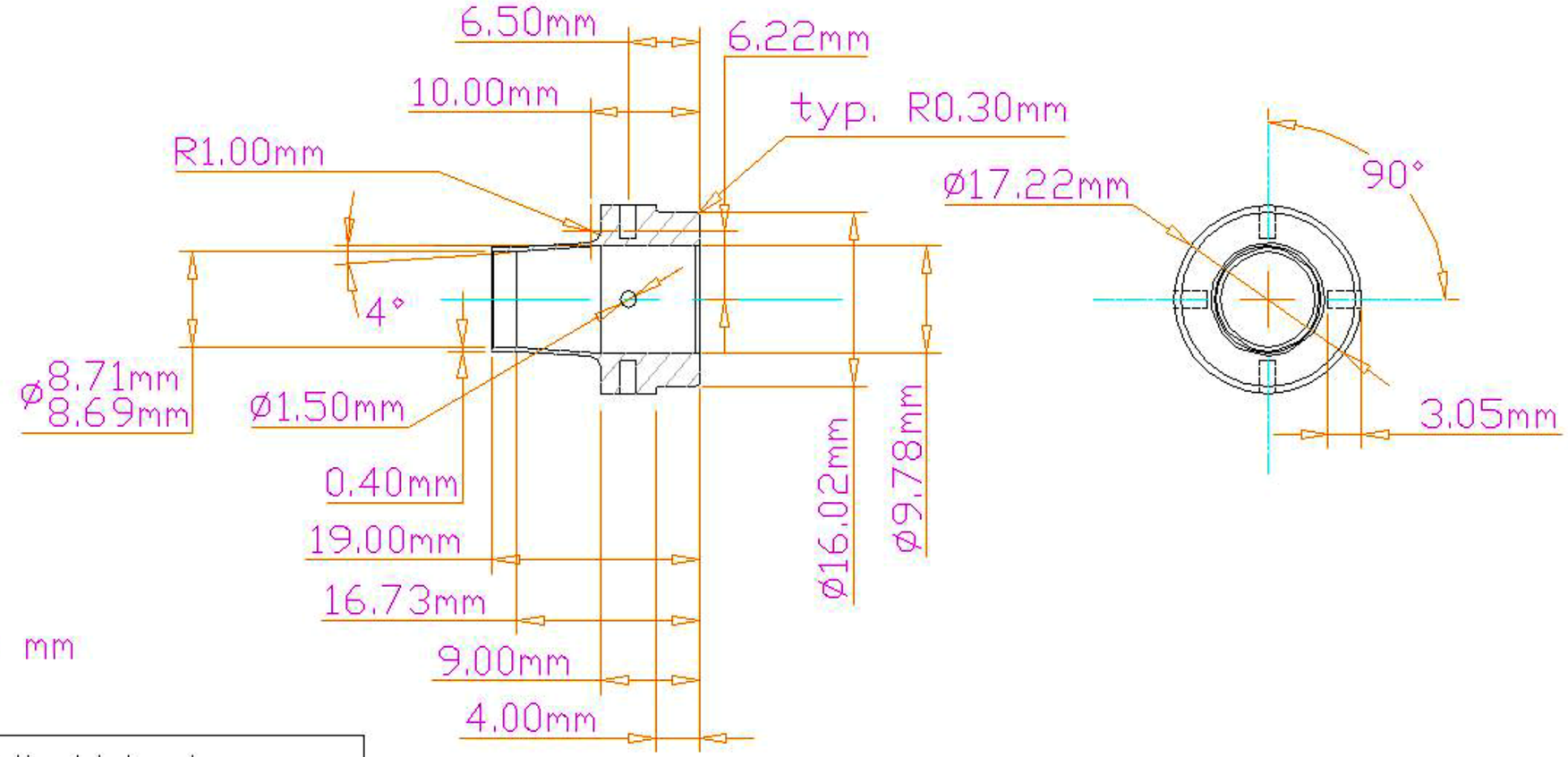

UNLESS OTHERWISE SPECIFIED: DIMENSIONS ARE IN mm [inch] TOLERANCES DECIMALS: X ± .25 mm, .X ± .13 mm, .XX ± .05 mm, .XXX ± .03 mm; ANGULAR ± 0.5° DO NOT SCALE DRAWING	Lawrence Berkeley National Laboratory ATLAS PP1 8.73mm OD Tube 7.92mm ID Sliding Seal To Bellows		
DATE NEEDED NA			
SURFACE TREATMENT NA	DWG NO. ag0467A	REV –	REV DATE 20 Sep 04
PART / NO. REQ'D	DRAWN BY Fred Goozen		PHONE 510 486 6924
467 / 15	START DATE 22 May 03		FAX 510 486 7111
0 / 00	LAST CHANGED 20 Sep 04		E-MAIL FRGoozen@lbl.gov
0 / 00	MATERIAL PEEK 30% glass filled		ACCOUNT P 1 AS 33