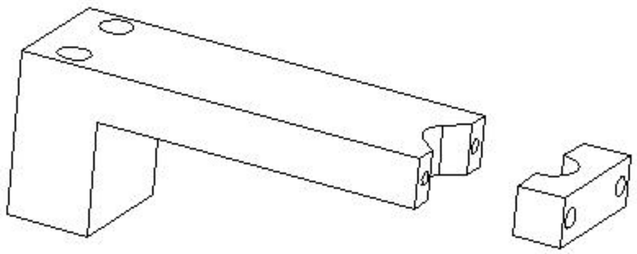

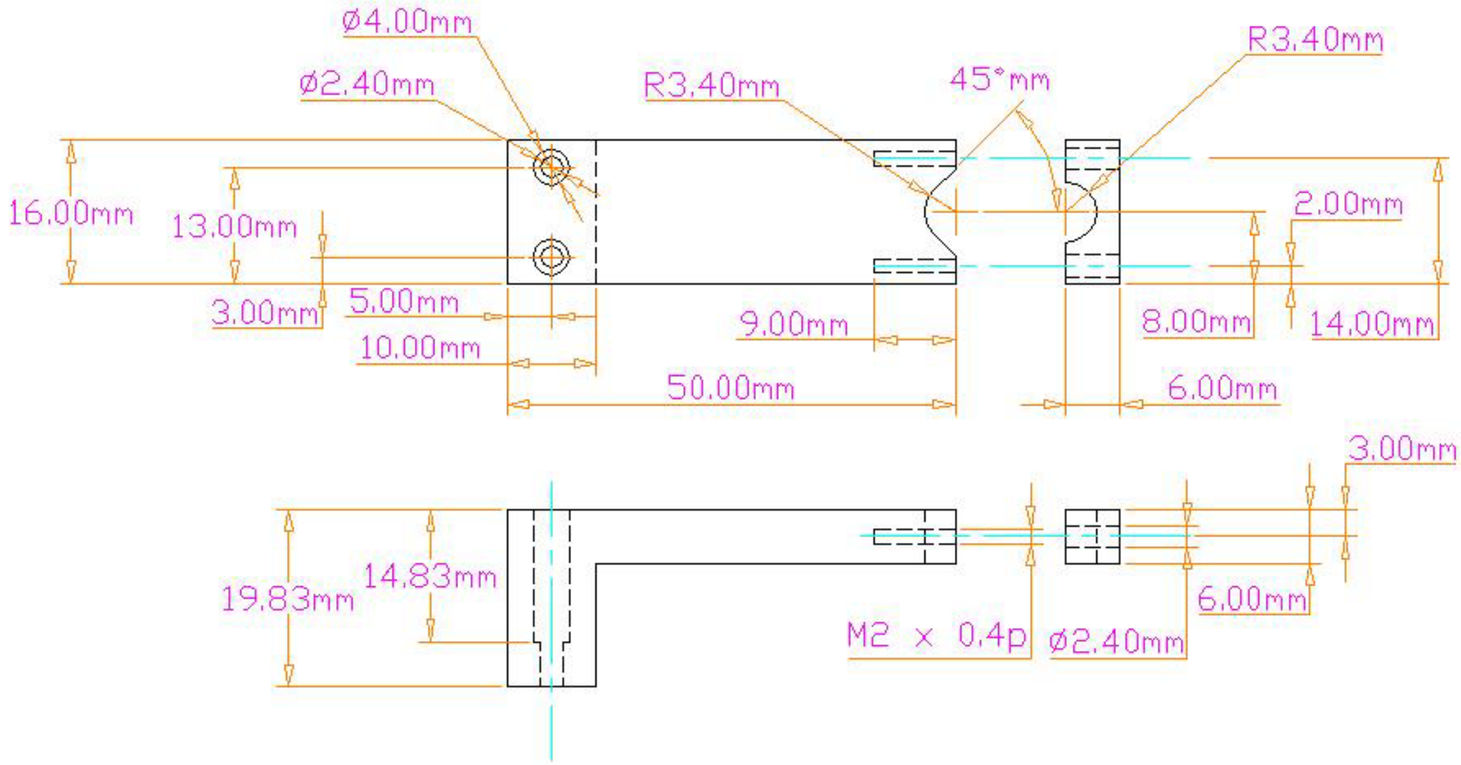

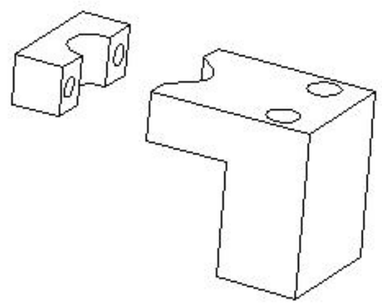

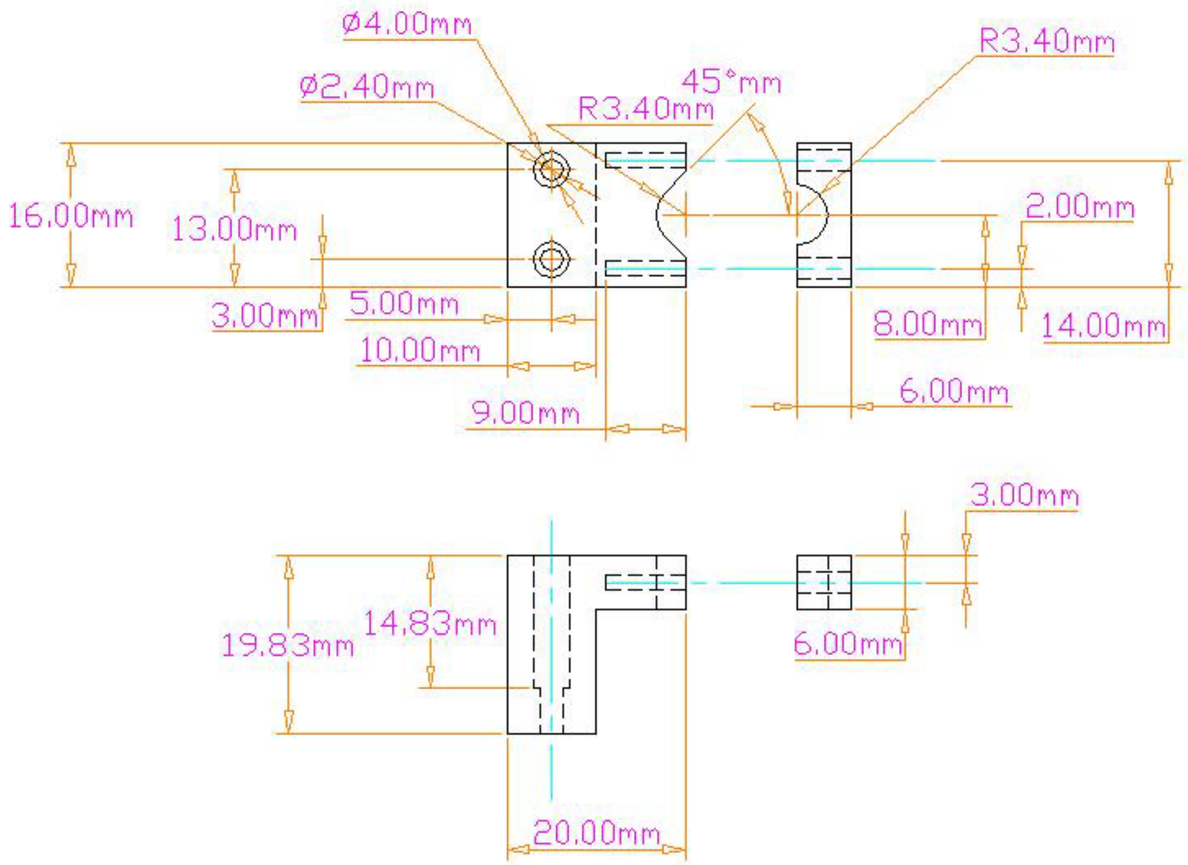

UNLESS OTHERWISE SPECIFIED: DIMENSIONS ARE IN mm [inch] TOLERANCES DECIMALS X ± .25 mm .X ± .13 mm .XX ± .05 mm .XXX ± .03 mm ANGULAR ± 0.5° DO NOT SCALE DRAWING	Lawrence Berkeley National Laboratory ATLAS Pixal Assembly Fixtures Sector Holder Tube Clamp		
DATE NEEDED 5 May 03			
SURFACE TREATMENT CLEAN	DWG NO. ag0465	REV –	REV DATE 25 Apr 03
PART / NO. REQ'D	DRAWN BY Fred Goozen		PHONE 510 486 6924
D 10	START DATE 25 Apr 03		FAX 510 486 7111
E 10	LAST CHANGED 25 Apr 03		E-MAIL FRGoozen@lbl.gov
0 00	MATERIAL Aluminum –		ACCOUNT P 1 AS 33