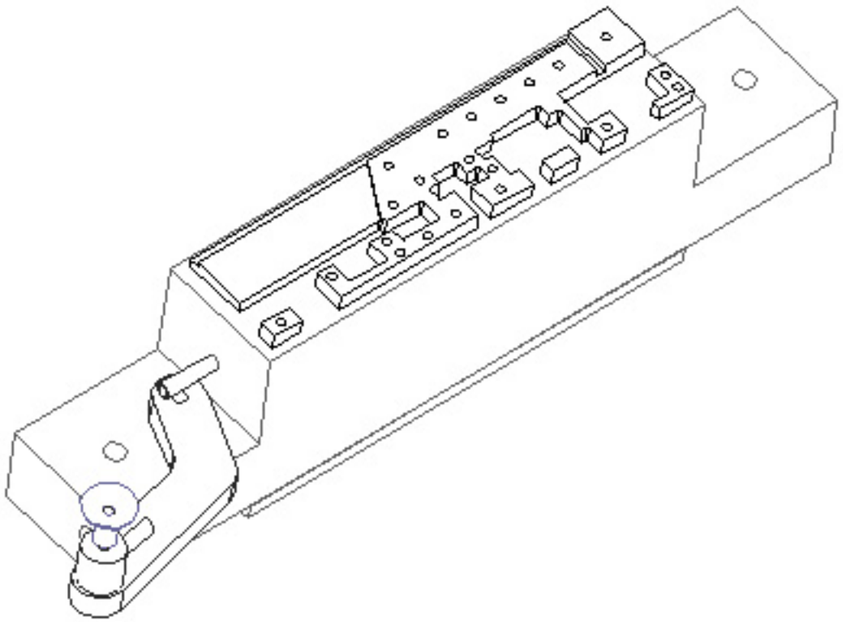

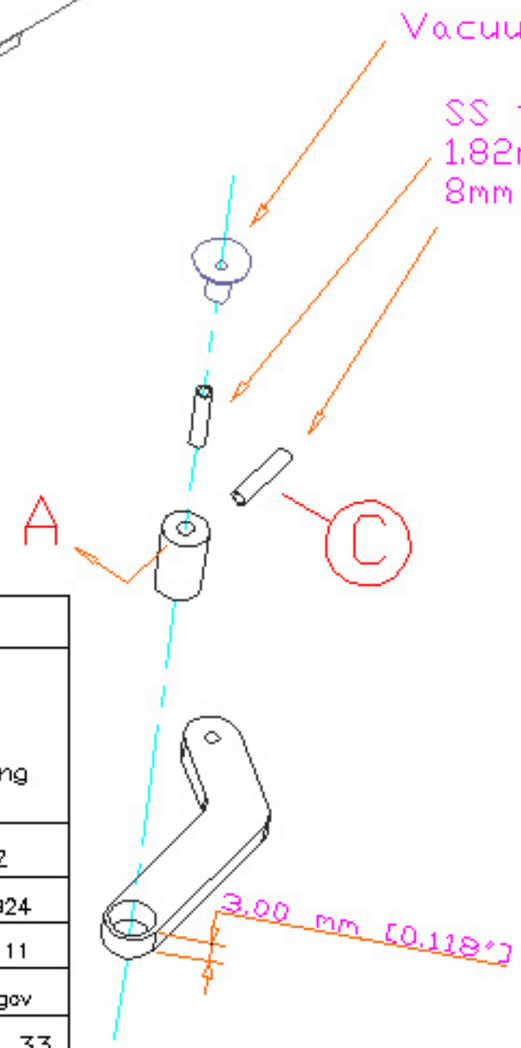

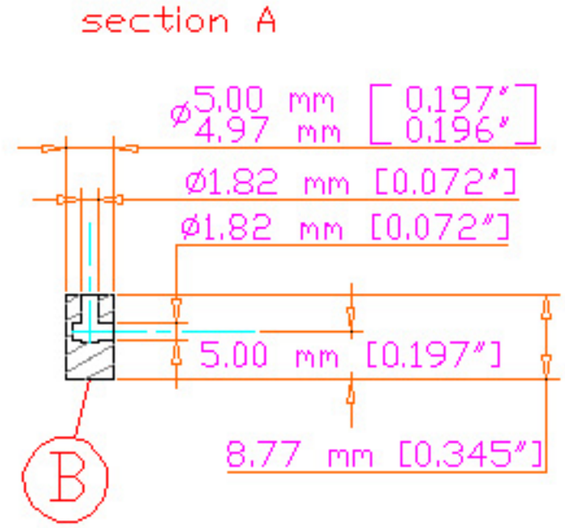

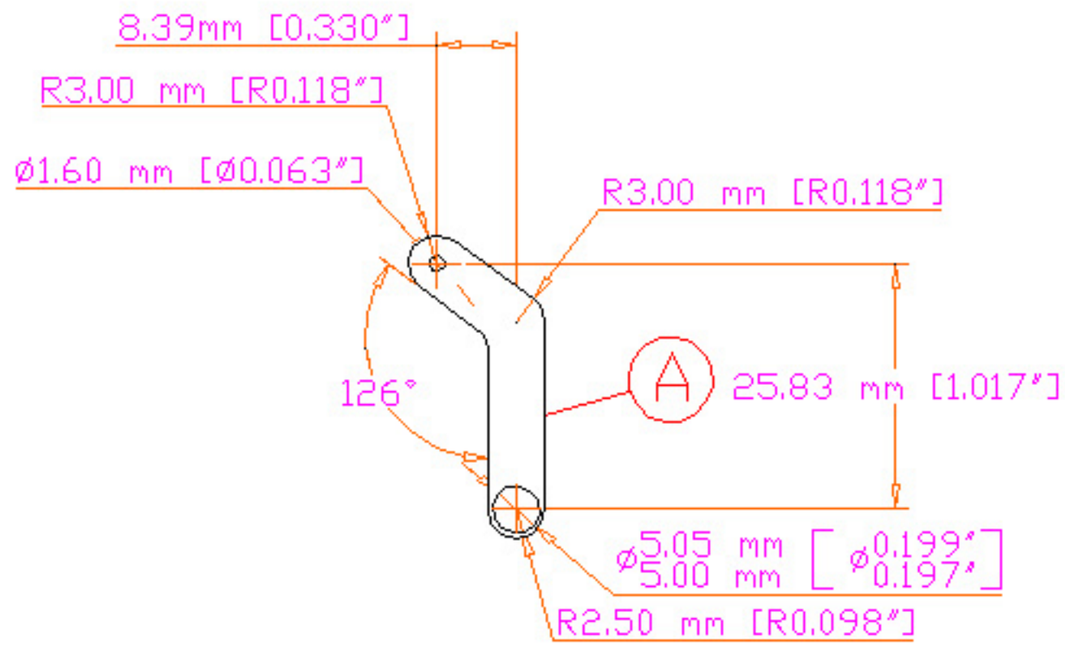

UNLESS OTHERWISE SPECIFIED: DIMENSIONS ARE IN mm [inch] TOLERANCES DECIMALS: X ± .25 mm, .X ± .13 mm, .XX ± .05 mm, .XXX ± .03 mm; ANGULAR ± 0.5° DO NOT SCALE DRAWING	Lawrence Berkeley National Laboratory		
DATE NEEDED NA	ATLAS Pixel Hybrid Vacuum Chuck Assembly Gluing, Drilling andFace Machining		
SURFACE TREATMENT NA	DWG NO. ag0428e	REV A	REV DATE 22 Mar 02
PART / NO. REQ'D	DRAWN BY Fred Goozen	PHONE 510 486 6924	
A 1	START DATE 28 Feb 02	FAX 510 486 7111	
B 1	LAST CHANGED 22 Mar 02	E-MAIL FRGoozen@lbl.gov	
C 2	MATERIAL Aluminum –	ACCOUNT P 1 AS 33	