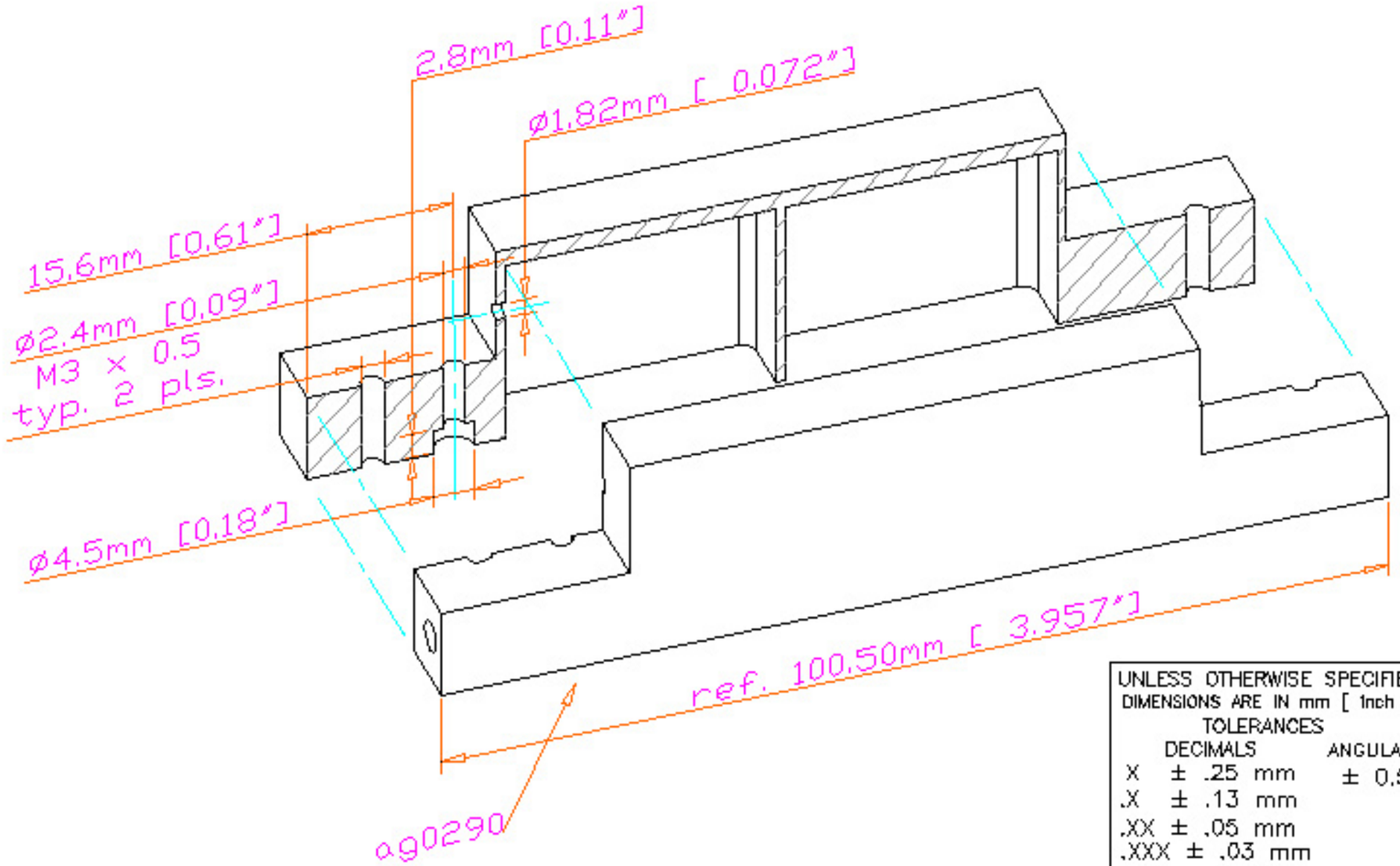

UNLESS OTHERWISE SPECIFIED: DIMENSIONS ARE IN mm [inch] TOLERANCES DECIMALS: X ± .25 mm; .X ± .13 mm; .XX ± .05 mm; .XXX ± .03 mm ANGULAR ± 0.5° DO NOT SCALE DRAWING	Lawrence Berkeley National Laboratory		
DATE NEEDED NA	ATLAS Pixal Hybrid Vacuum Chuck Body Changes to ag0290		
SURFACE TREATMENT clean	DWG NO. ag0428f	REV –	REV DATE 4 Mar 02
PART / NO. REQ'D	DRAWN BY Fred Goozen	PHONE 510 486 6924	
0 00	START DATE 4 Mar 02	FAX 510 486 7111	
0 00	LAST CHANGED 4 Mar 02	E-MAIL FRGoozen@lbl.gov	
0 00	MATERIAL Aluminum –	ACCOUNT P 1 AS 33	