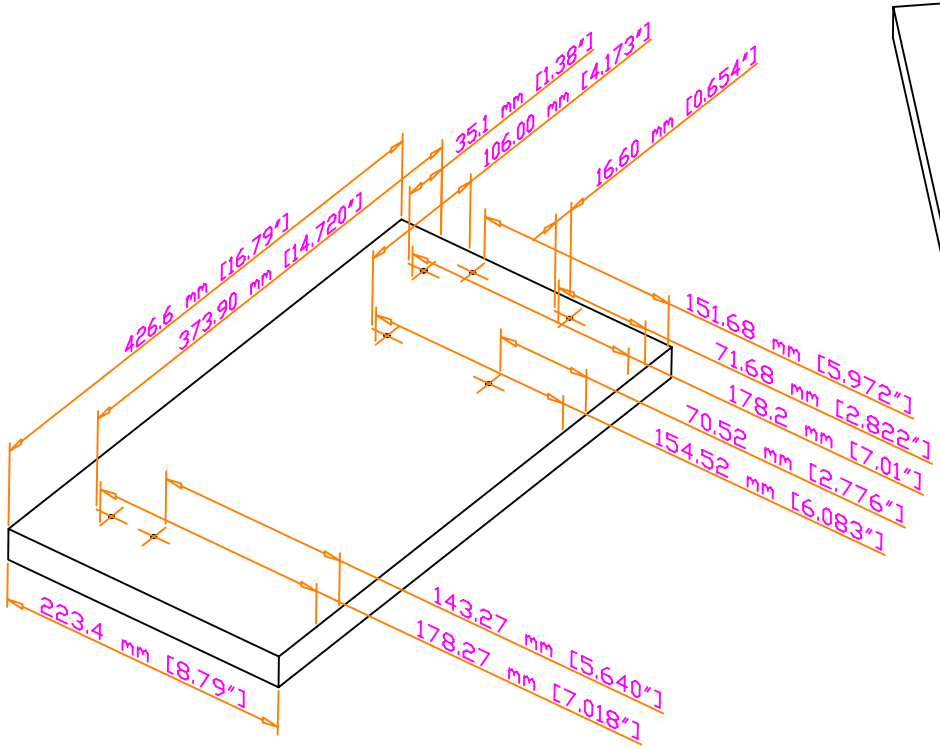

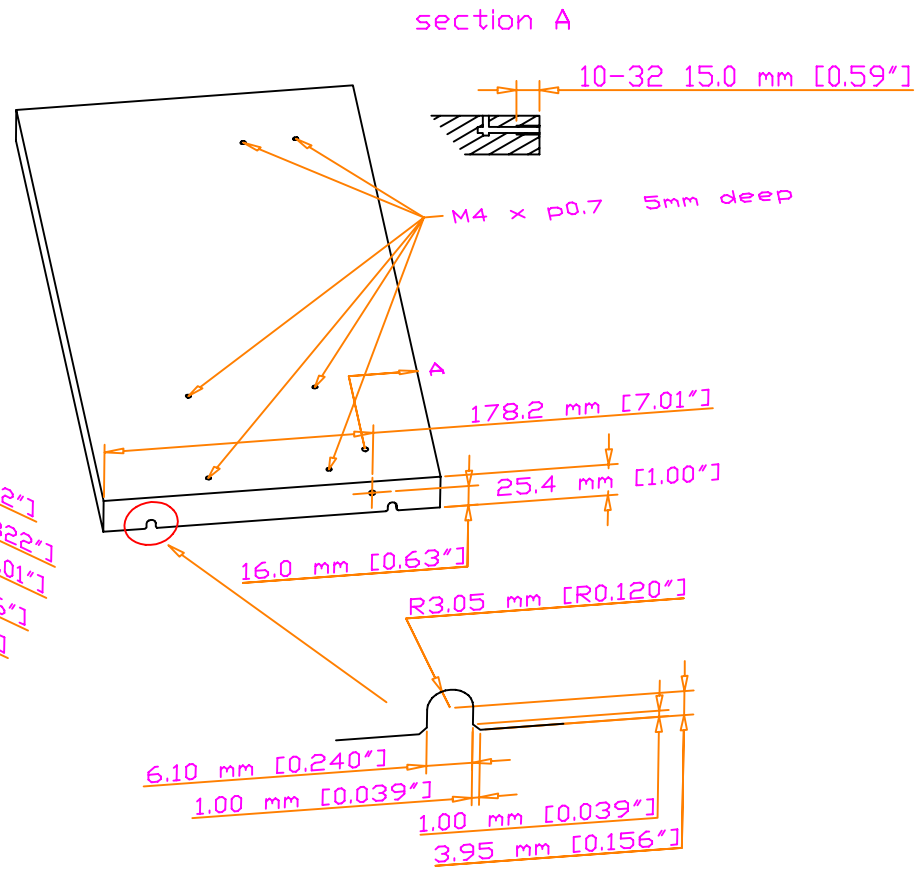

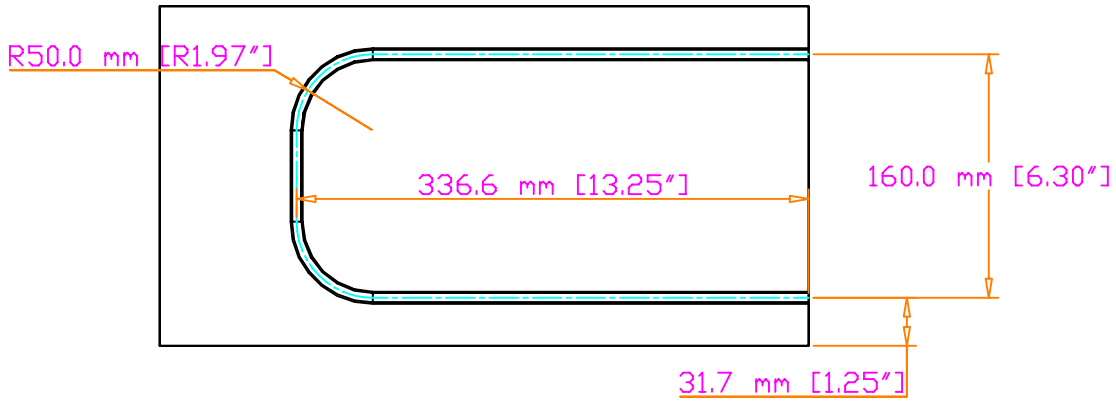

UNLESS OTHERWISE SPECIFIED: DIMENSIONS ARE IN mm [inch] TOLERANCES DECIMALS X ± .25 mm .X ± .13 mm .XX ± .05 mm .XXX ± .03 mm ANGULAR ± 0.5° DO NOT SCALE DRAWING	Lawrence Berkeley National Laboratory		
	ATLAS SCT Multi purpose Fixture Cooling Block Single		
DATE NEEDED NA			
SURFACE TREATMENT Clean	DWG NO. ag0423a1	REV –	REV DATE 8 Feb 02
PART / NO. REQ'D	DRAWN BY Fred Goozen	PHONE 510 486 6924	
423a 4	START DATE 8 Feb 02	FAX 510 486 7111	
0 00	LAST CHANGED 13 Feb 02	E-MAIL FRGoozen@lbl.gov	
0 00	MATERIAL Aluminum 6061 T6	ACCOUNT P 1 AS 33	