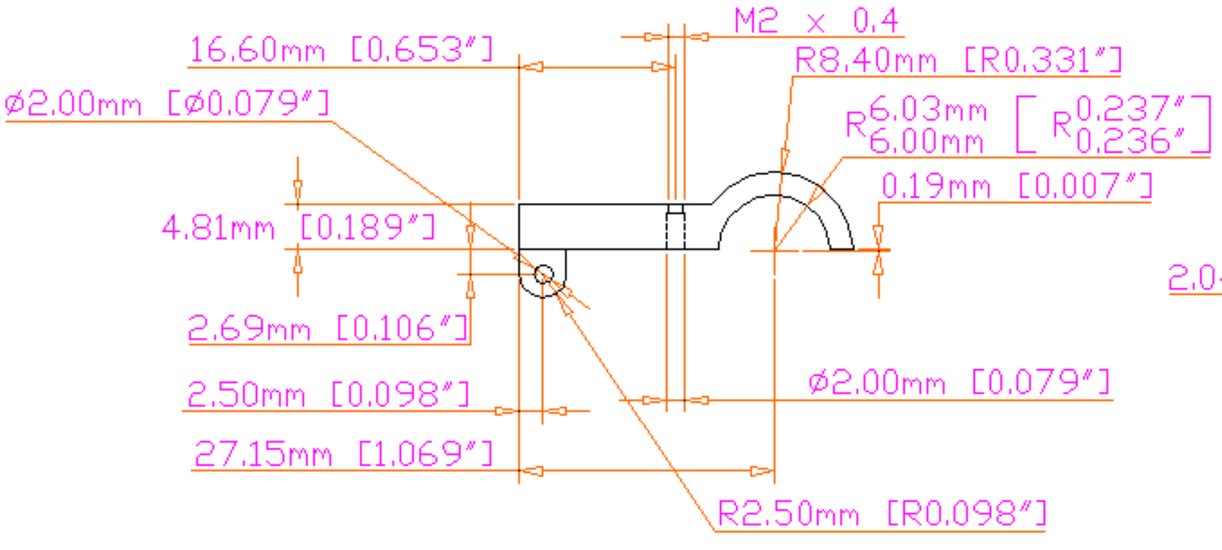


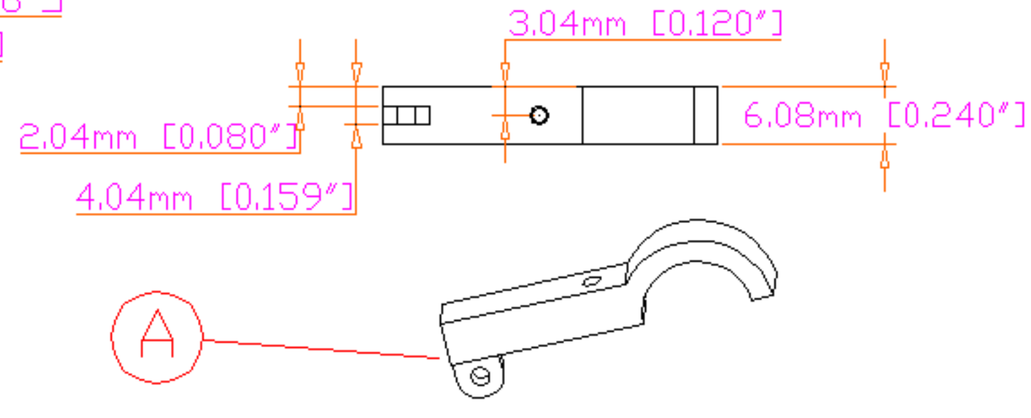


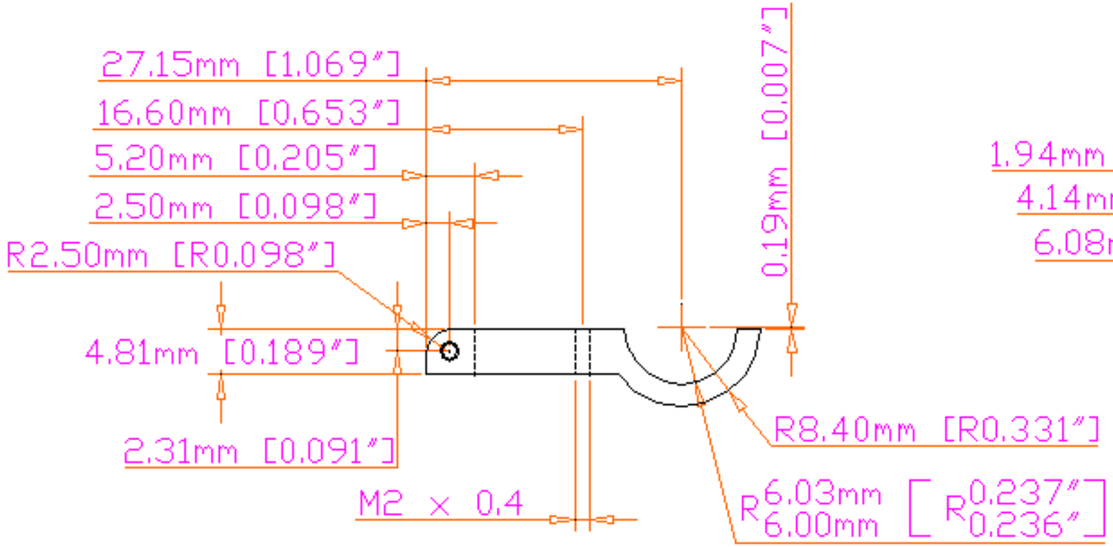


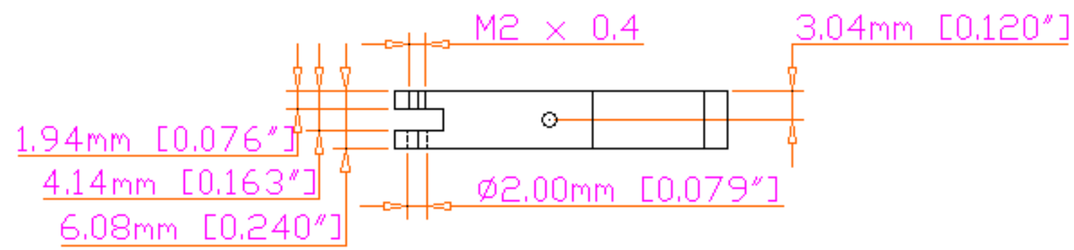


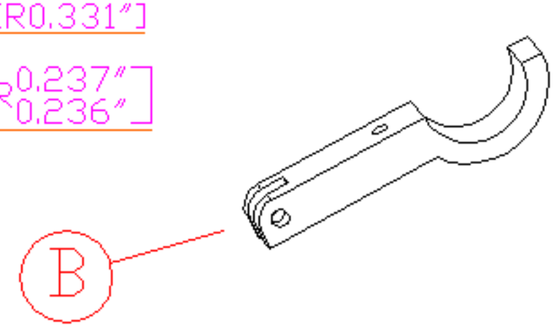


| | | | |
|---|---|---|---|
| UNLESS OTHERWISE SPECIFIED DIMENSIONS ARE IN mm [ inch ] TOLERANCES DECIMALS X ± .25 mm .X ± .13 mm .XX ± .05 mm .XXX ± .03 mm ANGULAR ± 0.5° DO NOT SCALE DRAWING | Lawrence Berkeley National Laboratory | | |
| | ATLAS Proposed Luer Lock type connector Wrench Nut Part C | | |
| NA | | | |
| Clean | ag0419 | – | 06 Dec 01 |
| PART | NO. REQD | Fred Goozen | 510 486 8924 |
| A | 2 | 18 Nov 01 | 510 486 7111 |
| B | 2 | 06 Dec 01 | FRGoozen@lbl.gov |
| 0 | 00 | aluminum 6061-T6 | P-1-AP-31 |