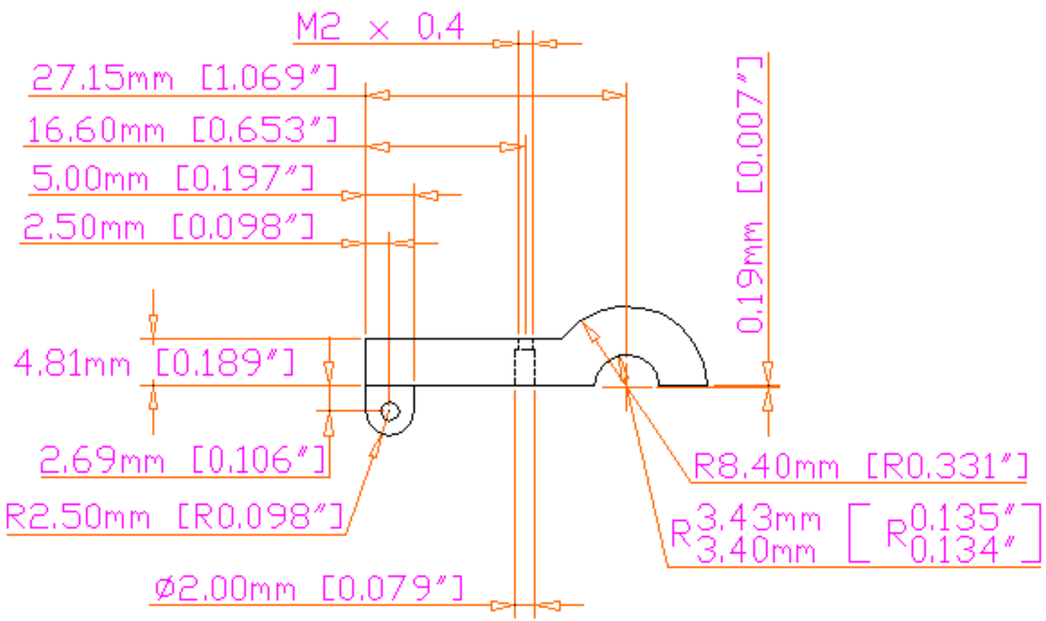

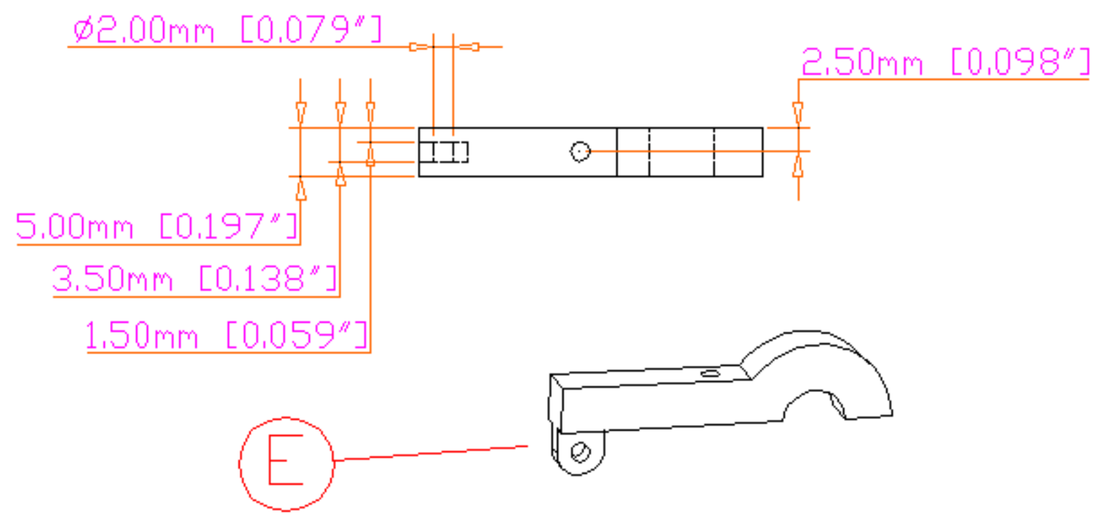

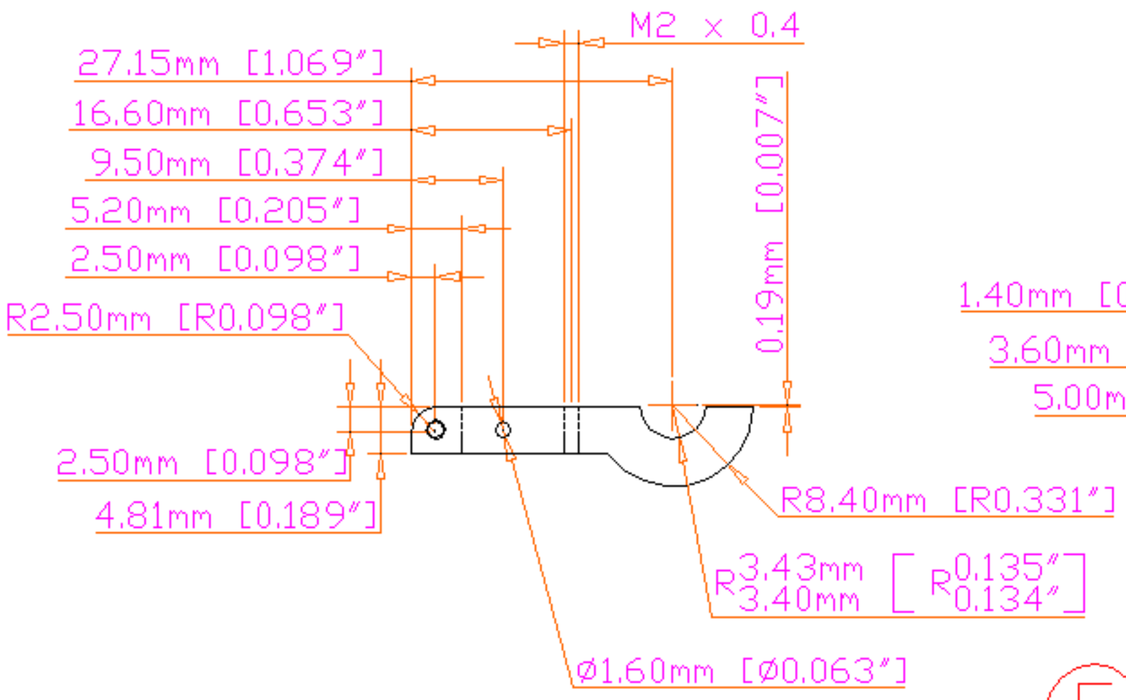

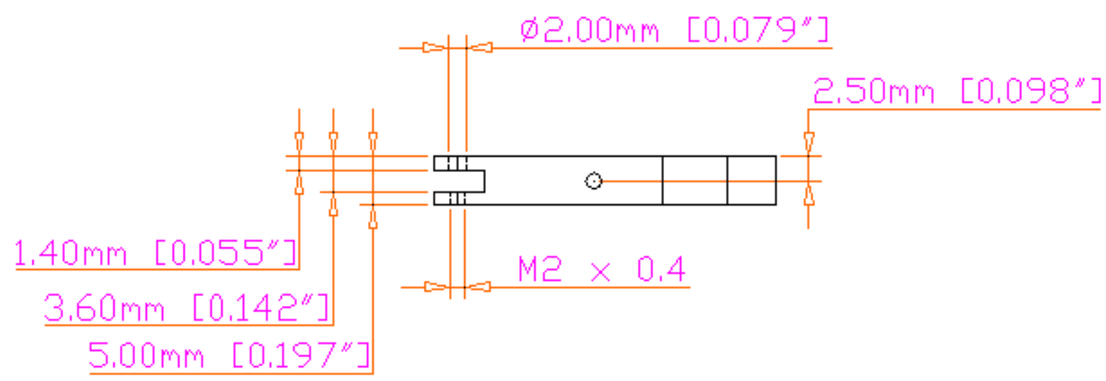

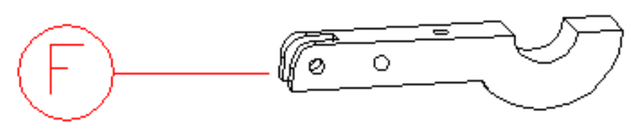

UNLESS OTHERWISE SPECIFIED: DIMENSIONS ARE IN mm [inch] TOLERANCES DECIMALS .X ± .25 mm .XX ± .05 mm .XXX ± .03 mm ANGULAR ± 0.5° DO NOT SCALE DRAWING	Lawrence Berkeley National Laboratory		
NA	ATLAS Proposed Luer Lock type connector Wrench Sector End Part B		
Clean	dg0419	–	06 Dec 01
PART	NO. REQ'D	Fred Goozen	510 486 8924
E	2	19 Nov 01	510 486 7111
F	2	06 Dec 01	FRGoozen@lbl.gov
0	00	aluminum 6061-T6	P-1-AP-31