supply end

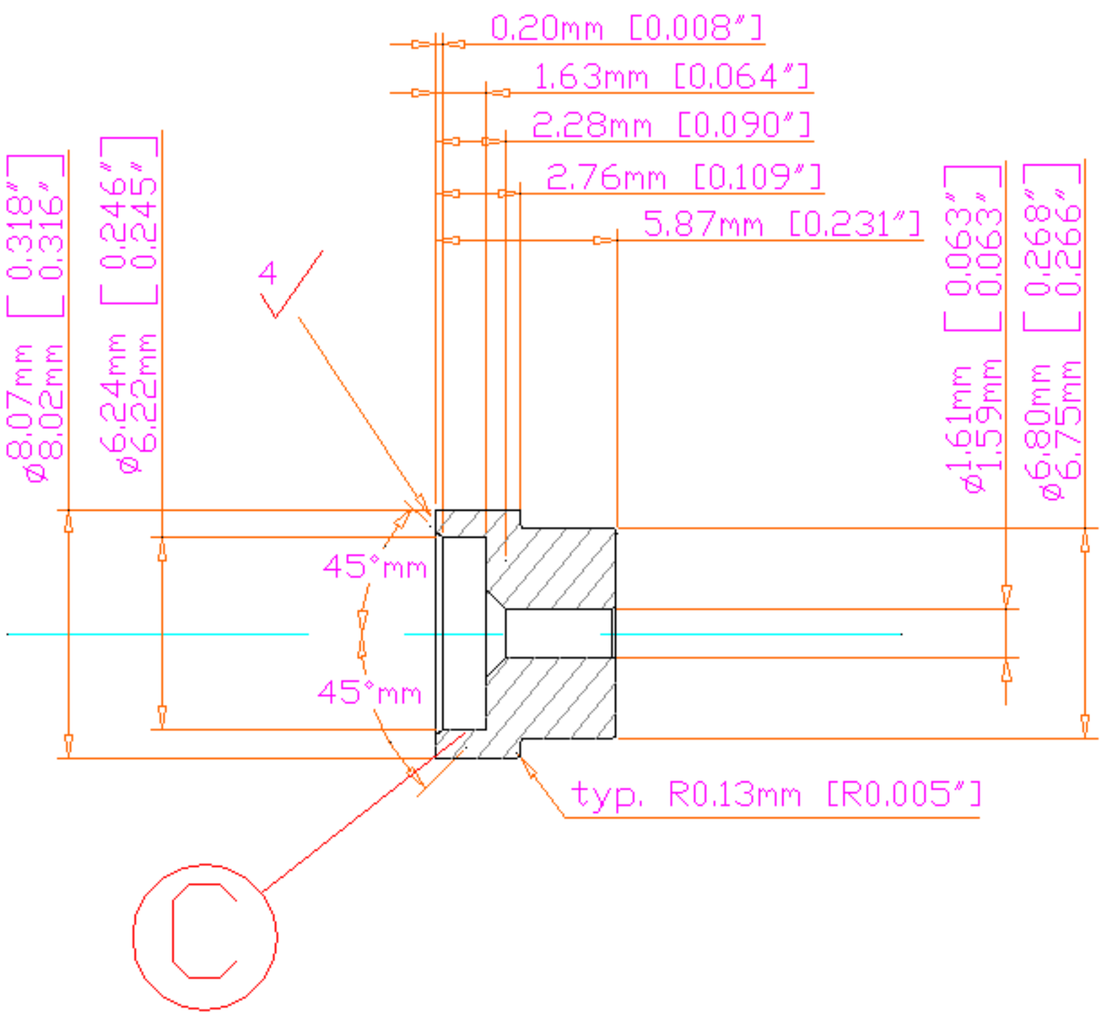

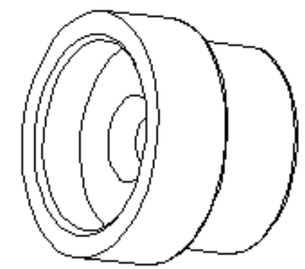

UNLESS OTHERWISE SPECIFIED: DIMENSIONS ARE IN mm [inch] TOLERANCES DECIMALS X ± .25 mm .X ± .13 mm .XX ± .05 mm .XXX ± .03 mm ANGULAR ± 0.5° DO NOT SCALE DRAWING	Lawrence Berkeley National Laboratory		
DATE PRINTED NA	ATLAS Proposed Indium connector Supply end		
HEAT TREATMENT na	DWG NO. ag0419c	REV A	REV DATE 04 Dec 01
PART / NO. REQ'D	DRAWN BY Fred Goozen		PHONE 510 486 6924
C 20	START DATE 19 Nov 01		FAX 510 486 7111
0 00	LAST CHANGED 04 Dec 01		E-MAIL FRGoozen@lbl.gov
0 00	MATERIAL aluminum 6061-T6		ACCOUNT P-1-AP-31