sector end

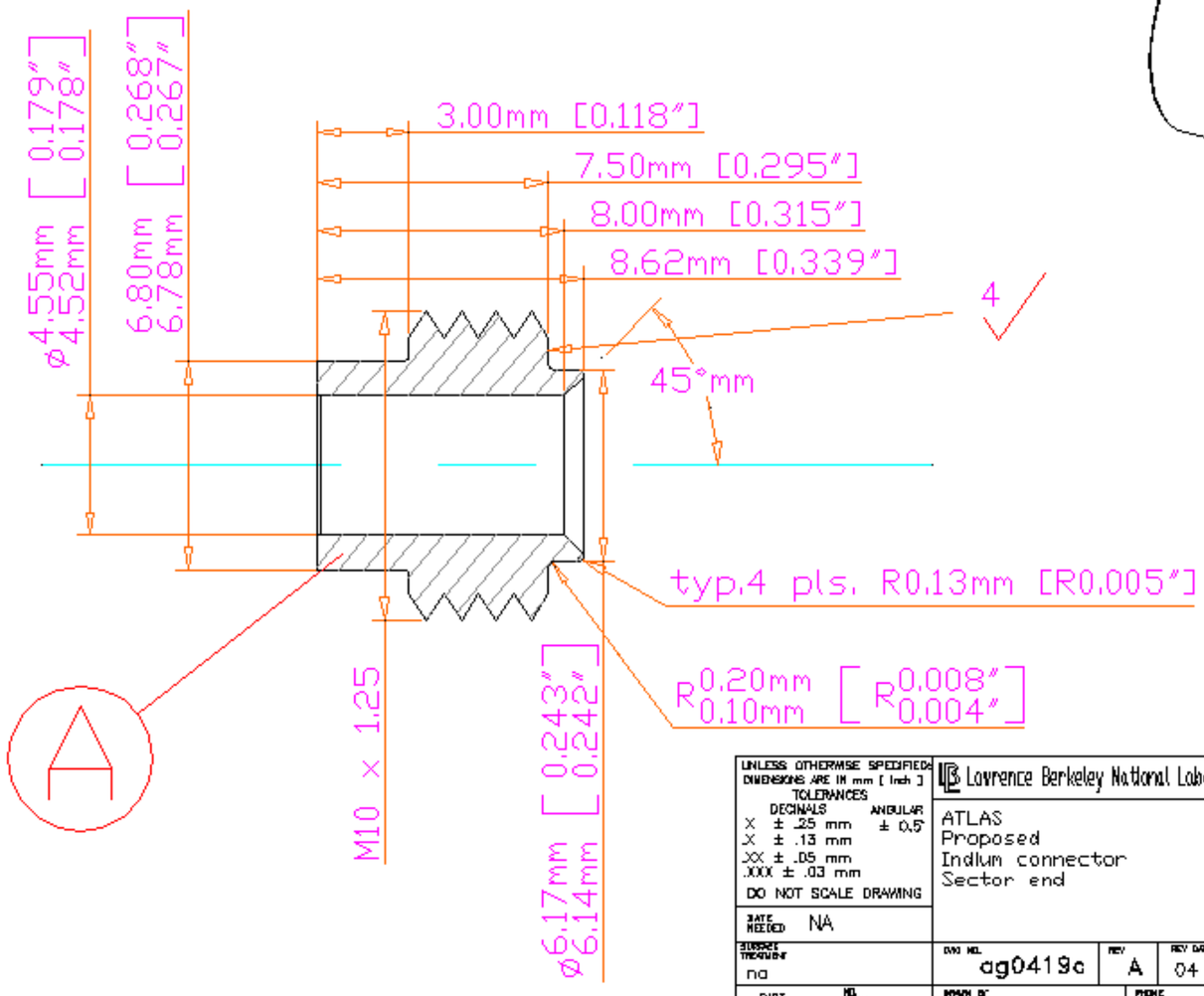

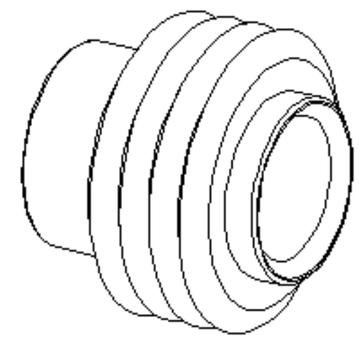

UNLESS OTHERWISE SPECIFIED DIMENSIONS ARE IN mm [Inch] TOLERANCES DECIMALS ANGULAR X ± .25 mm ± 0.5° .X ± .13 mm .XX ± .05 mm .XXX ± .03 mm DO NOT SCALE DRAWING	Lawrence Berkeley National Laboratory		
DATE NEEDED NA	ATLAS Proposed Indium connector Sector end		
SUBSTITUTE TREATMENT na	DWG NO. ag0419c	REV A	REV DATE 04 Dec 01
PART / NO. REQ'D	DRAWN BY Fred Goozen		PHONE 510 486 8924
A 40	START DATE 19 Nov 01		FAX 510 486 7111
0 00	LAST CHANGED 04 Dec 01		E-MAIL FRGoozen@lbl.gov
0 00	MATERIAL aluminum 6061-T6		ACCOUNT P-1-AP-31