return end

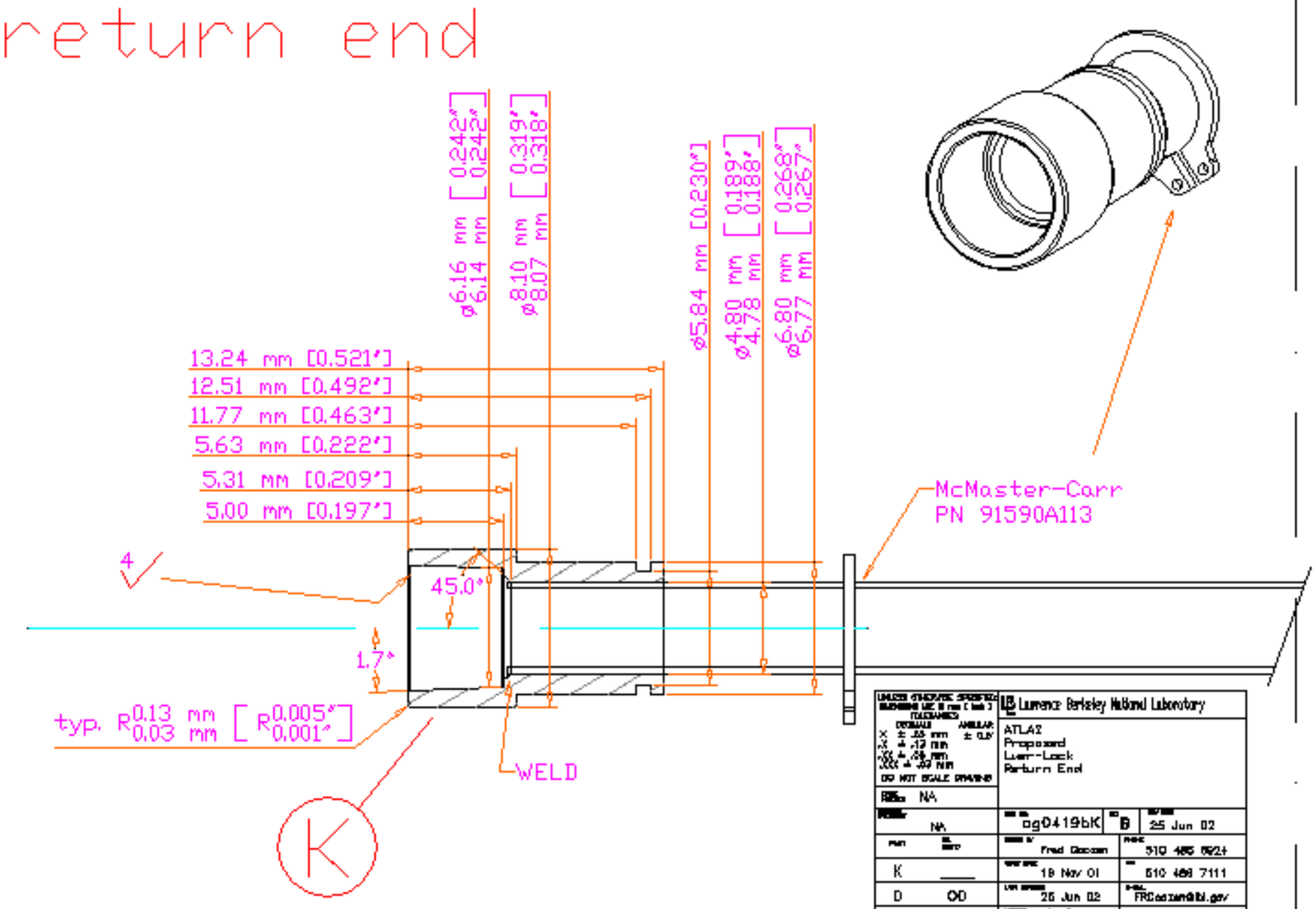
ø6.16 mm [0.242"]
6.14 mm [0.242"]
ø8.10 mm [0.319"]
8.07 mm [0.318"]
ø5.84 mm [0.230"]
ø4.80 mm [0.189"]
4.78 mm [0.188"]
ø6.80 mm [0.268"]
6.77 mm [0.267"]
13.24 mm [0.521"]
12.51 mm [0.492"]
11.77 mm [0.463"]
5.63 mm [0.222"]
5.31 mm [0.209"]
5.00 mm [0.197"]
4
45.0°
1.7°
typ. R 0.13 mm [R 0.005"]
0.03 mm [R 0.001"]
WELD
McMaster-Carr
PN 91590A113
K
Lawrence Berkeley National Laboratory
ATLAS
Proposed
Lum-Lock
Return End
NA
NA
og0419bK
B
25 Jun 02
Fred Goozen
510 486 6924
K
19 Nov 01
510 486 7111
D
OD
25 Jun 02
FRGoozen@lbl.gov
D
OD
aluminum
6063 T52
P-1-AP-12