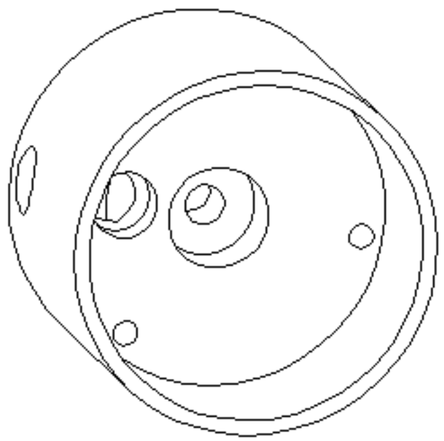

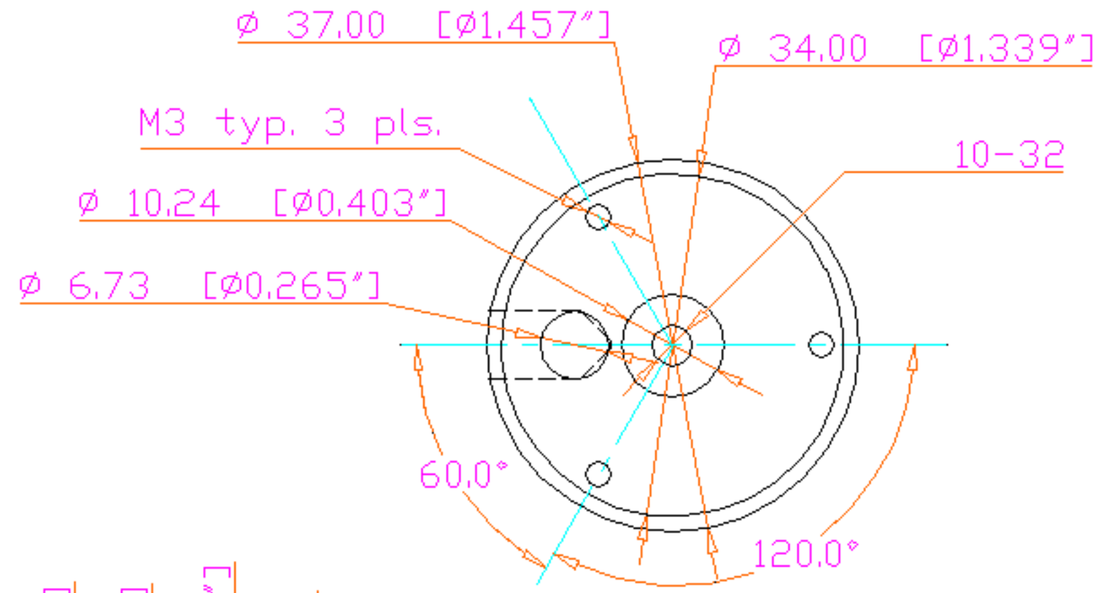

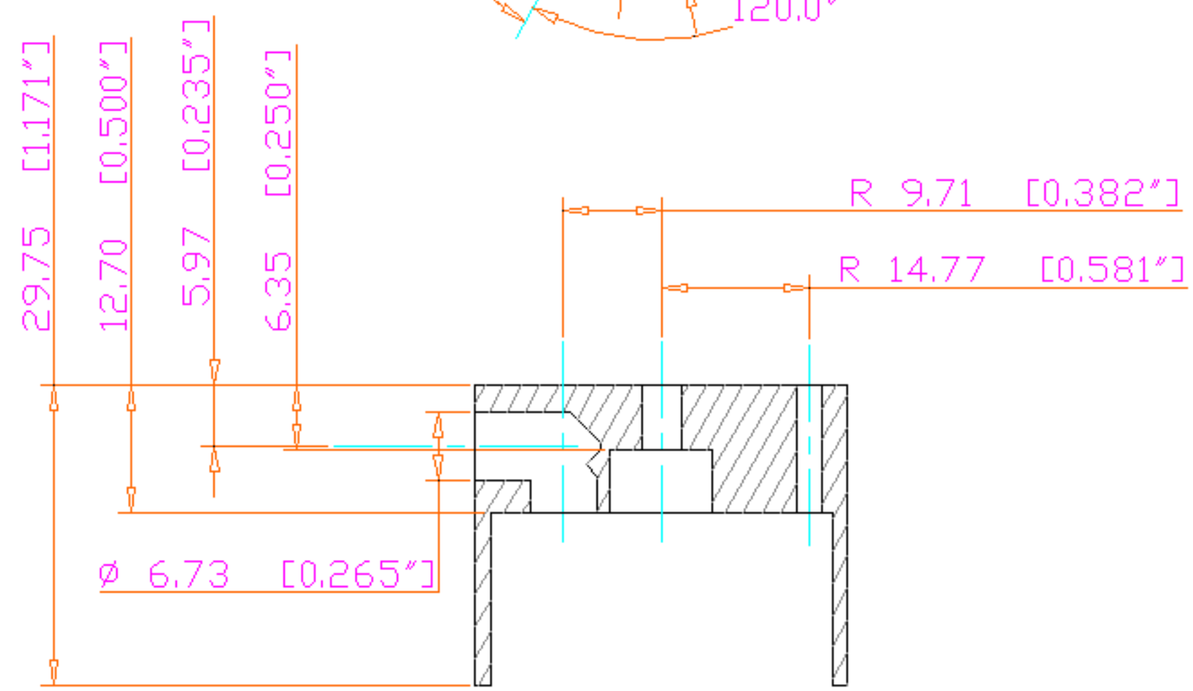

UNLESS OTHERWISE SPECIFIED: DIMENSIONS ARE IN mm [inch] TOLERANCES DECIMALS: X ± .25 mm, .X ± .13 mm, .XX ± .05 mm, .XXX ± .03 mm; ANGULAR ± 0.5° DO NOT SCALE DRAWING	Lawrence Berkeley National Laboratory		
DATE NEEDED NA	ATLAS SCT Detector Module Multi Purpose Fixture Chip Remover Handel		
SURFACE TREATMENT hard anodize black	DWG NO. ag0416c	REV –	REV DATE 6 Nov 01
PART / NO. REQ'D	DRAWN BY Fred Goozen	PHONE 510 486 6924	
416c 2	START DATE 26 Oct 01	FAX 510 486 7111	
0 00	LAST CHANGED 21 Nov 01	E-MAIL FRGoozen@lbl.gov	
0 00	MATERIAL bakelite	ACCOUNT P-1-AP-31	