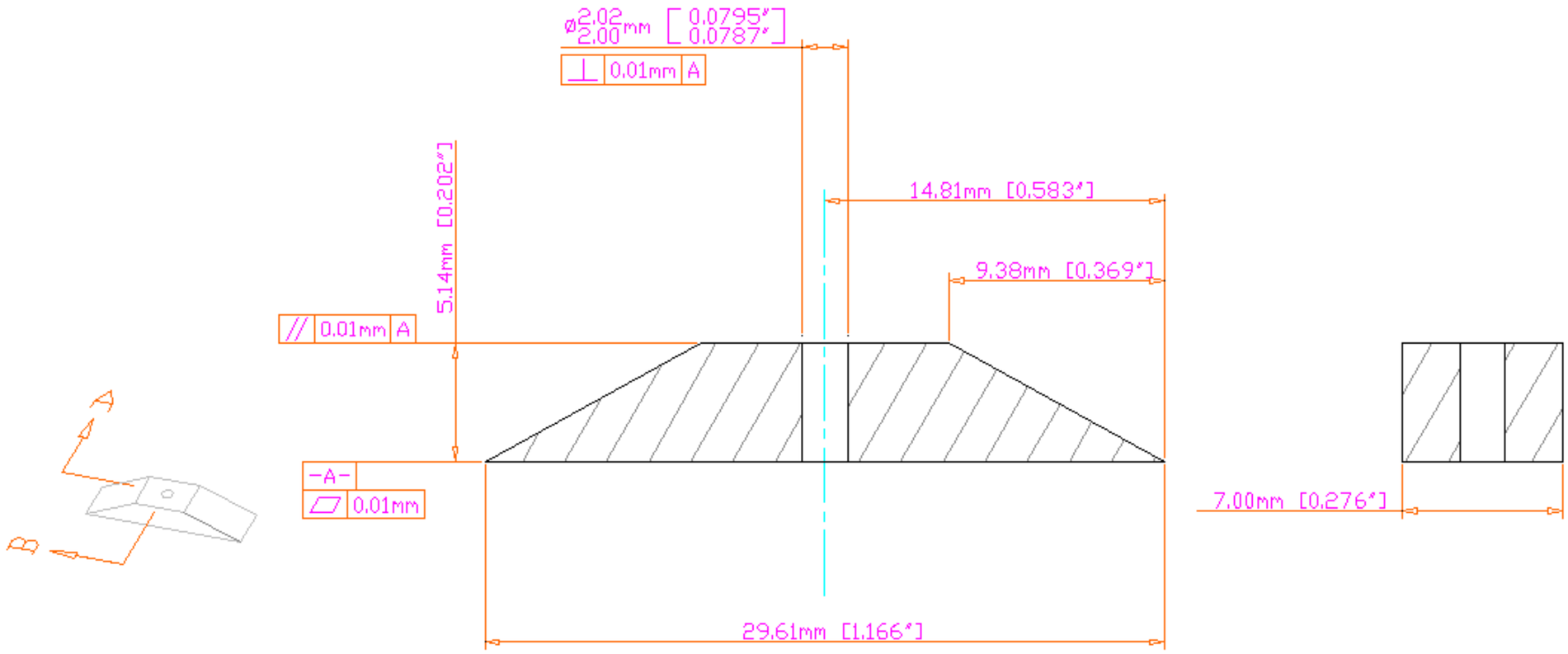

UNLESS OTHERWISE SPECIFIED: DIMENSIONS ARE IN mm [inch] TOLERANCES DECIMALS / ANGULAR X ± .25 mm / ± 0.5° .X ± .13 mm .XX ± .05 mm .XXX ± .03 mm DO NOT SCALE DRAWING	Lawrence Berkeley National Laboratory ATLAS SCT Detector Module Multi Purpose Fixture Chip Chuck Base		
DATE NEEDED NA			
SURFACE TREATMENT hard anodize black	DWG NO. ag0410	REV A	REV DATE 21 Dec 01
PART / NO. REQ'D	DRAWN BY Fred Goozen		PHONE 510 486 6924
410 / 2	START DATE 16 Oct 01		FAX 510 486 7111
0 / 00	LAST CHANGED 21 Dec 01		E-MAIL FRGoozen@lbl.gov
0 / 00	MATERIAL aluminum 6061-T6		ACCOUNT P-1-AP-31