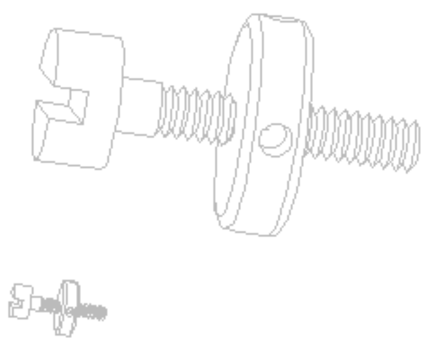

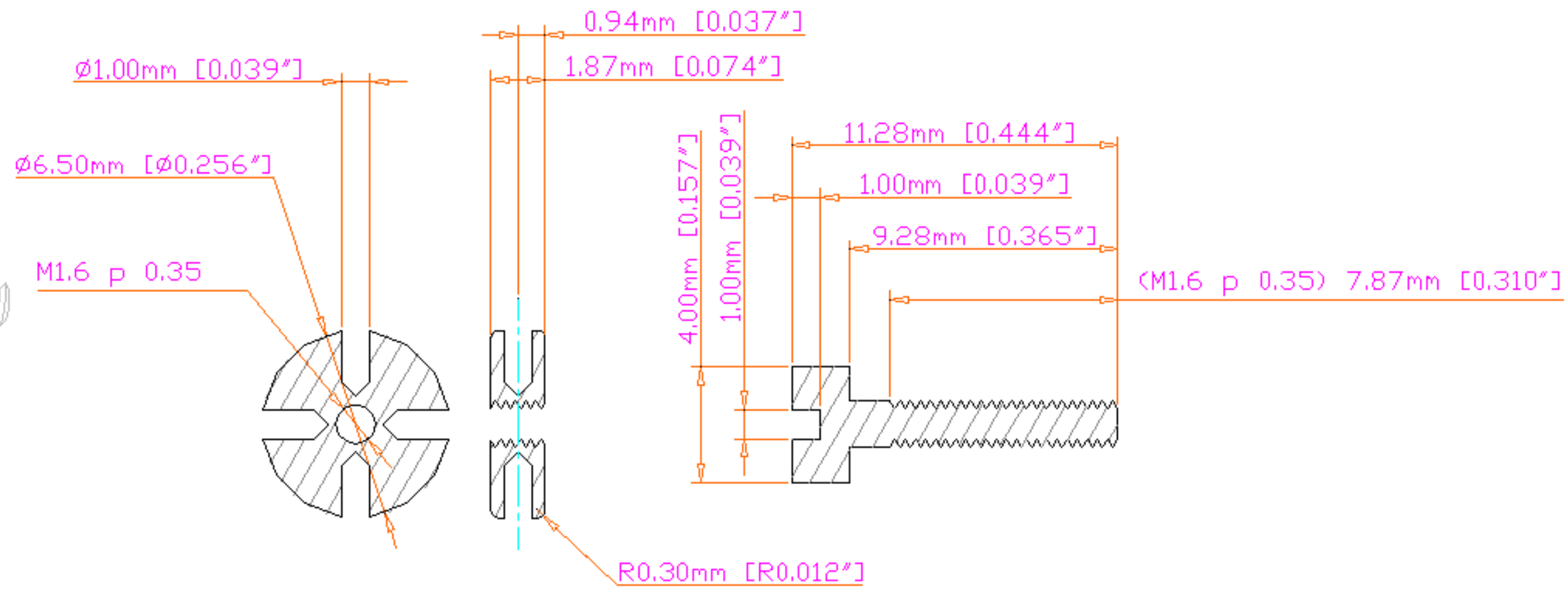

UNLESS OTHERWISE SPECIFIED: DIMENSIONS ARE IN mm [inch] TOLERANCES DECIMALS X ± .25 mm .X ± .13 mm .XX ± .05 mm .XXX ± .03 mm ANGULAR ± 0.5° DO NOT SCALE DRAWING	Lawrence Berkeley National Laboratory		
DATE NEEDED NA	ATLAS SCT Detector Module Multi Purpose Fixture Chip Chuck Adjuster		
SURFACE TREATMENT NA	DWG NO. ag0409	REV –	REV DATE 25 Oct 01
PART / NO. REQ'D	DRAWN BY Fred Goozen		PHONE 510 486 6924
409 / 10	START DATE 16 Oct 01		FAX 510 486 7111
0 / 00	LAST CHANGED 25 Oct 01		E-MAIL FRGoozen@lbl.gov
0 / 00	MATERIAL SS		ACCOUNT P-1-AP-31