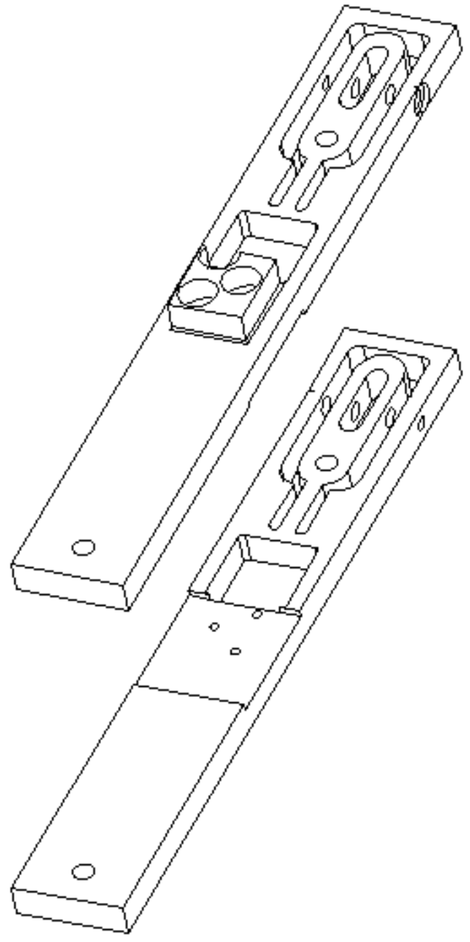

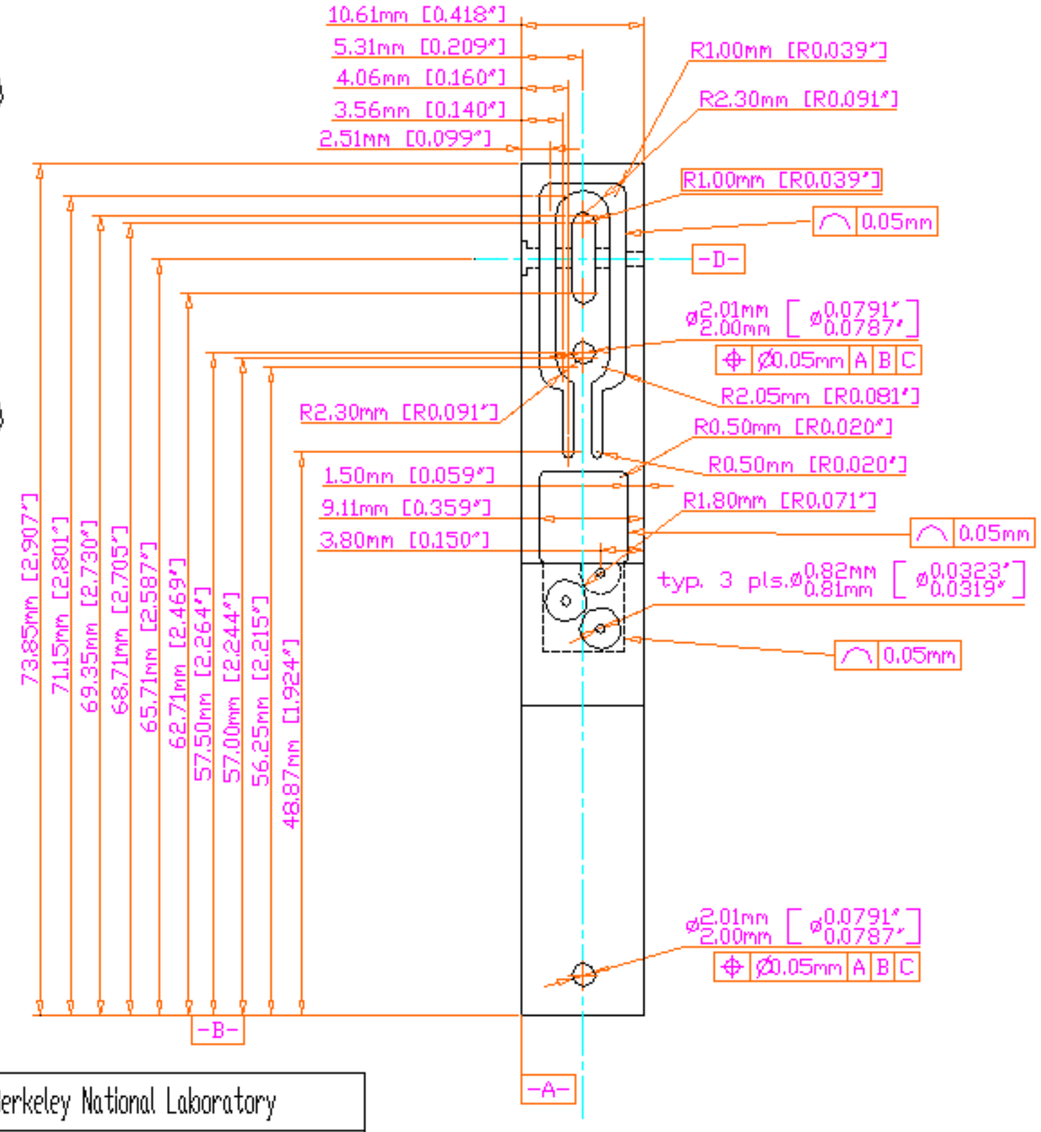

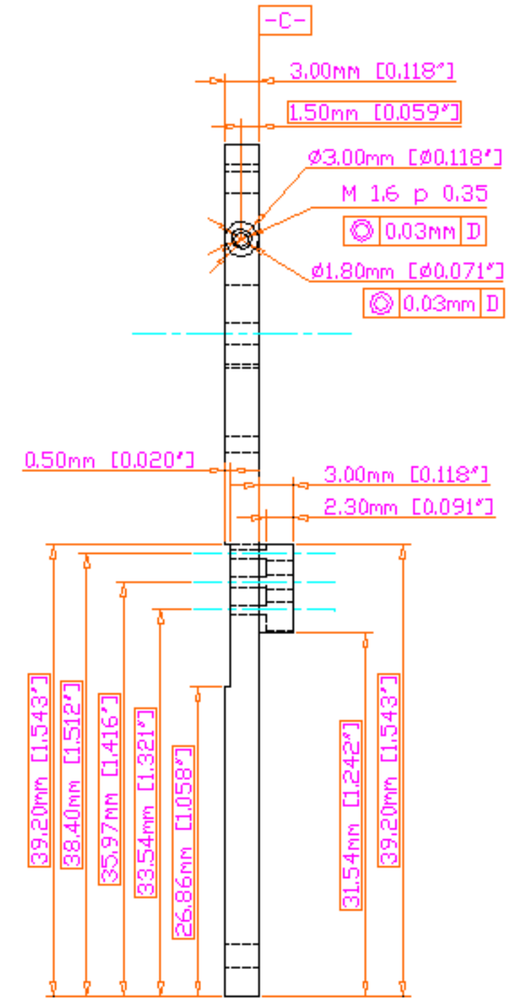

UNLESS OTHERWISE SPECIFIED:
DIMENSIONS ARE IN mm [inch]
TOLERANCES

DECIMALS	ANGULAR
X ± .25 mm	± 0.5°
.X ± .13 mm	
.XX ± .05 mm	
.XXX ± .03 mm	

DO NOT SCALE DRAWING

Lawrence Berkeley National Laboratory

ATLAS
SCT Detector Module
Multi Purpose Fixture
Chip Chuck Body

DATE NEEDED: NA			
SURFACE TREATMENT: hard anodize black	DWG NO.: ag0407	REV: A	REV DATE: 21 Dec 01
PART: 407	NO. REQ'D: 1	DRAWN BY: Fred Goozen	PHONE: 510 486 6924
		START DATE: 16 Oct 01	FAX: 510 486 7111
0	00	LAST CHANGED: 21 Dec 01	E-MAIL: FRGoozen@lbl.gov
0	00	MATERIAL: aluminum 6061-T6	ACCOUNT: P-1-AP-31