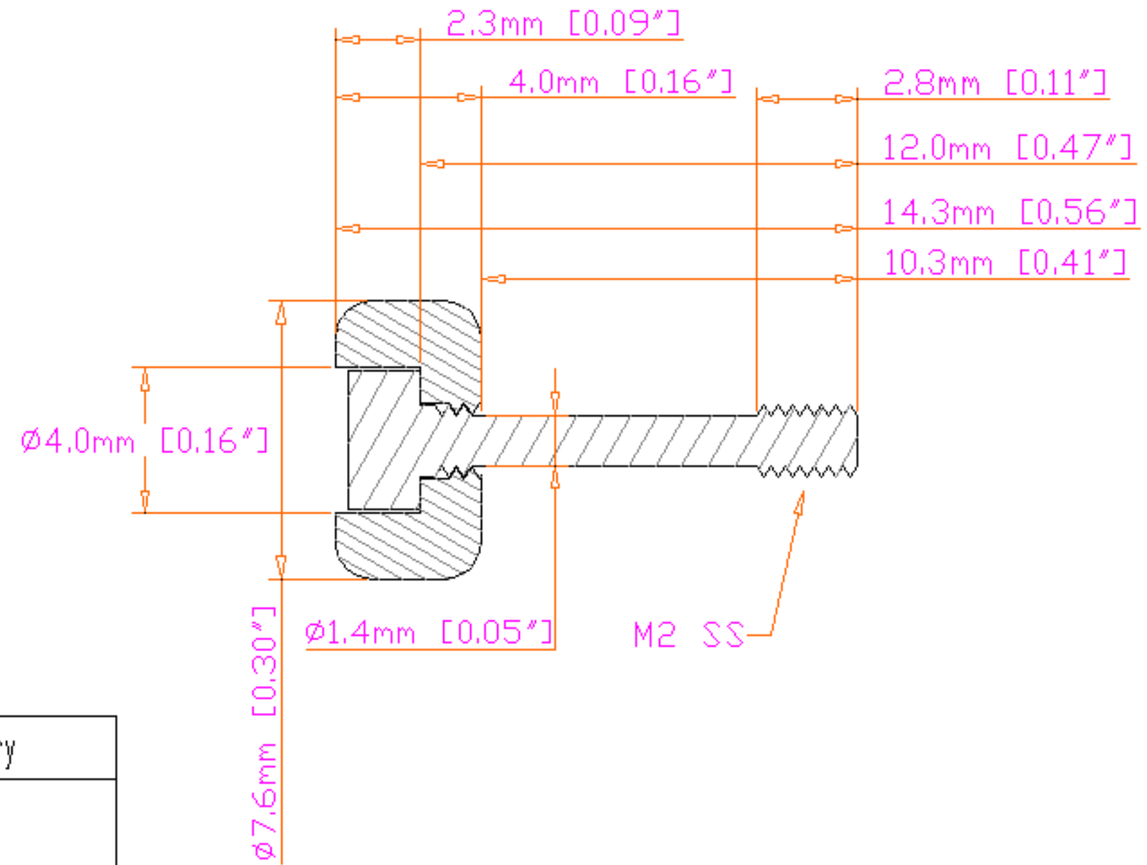

UNLESS OTHERWISE SPECIFIED: DIMENSIONS ARE IN mm [inch] TOLERANCES DECIMALS: X ± .25 mm, .X ± .13 mm, .XX ± .05 mm, .XXX ± .03 mm; ANGULAR ± 0.5° DO NOT SCALE DRAWING	Lawrence Berkeley National Laboratory ATLAS SCT Detector Module Multi Purpose Fixture Glue Mask Screw		
DATE NEEDED: NA			
SURFACE TREATMENT: bright dip	DWG NO.: ag0404	REV: –	REV DATE: 10 Oct 01
PART: 404	NO. REQ'D: 4	DRAWN BY: Fred Goozen	PHONE: 510 486 6924
		START DATE: 10 Oct 01	FAX: 510 486 7111
0	00	LAST CHANGED: 16 Oct 01	E-MAIL: FRGoozen@lbl.gov
0	00	MATERIAL: Brass –	ACCOUNT: P-1-AP-31