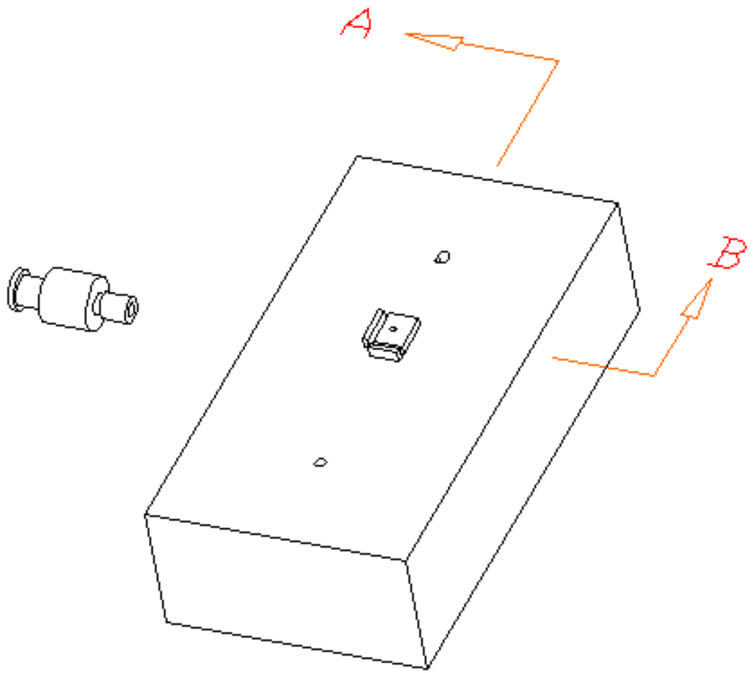

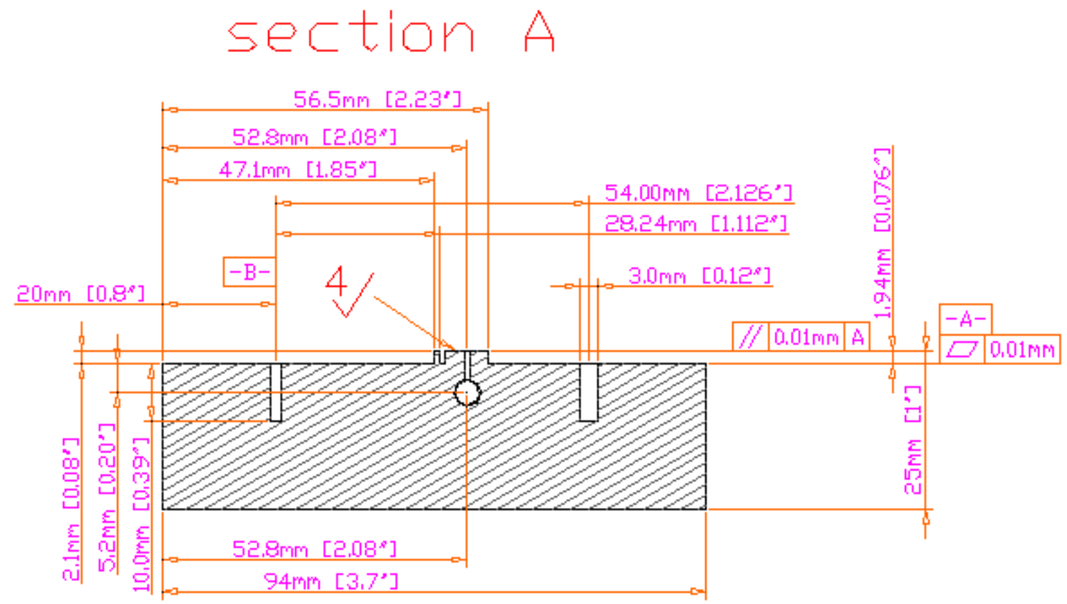

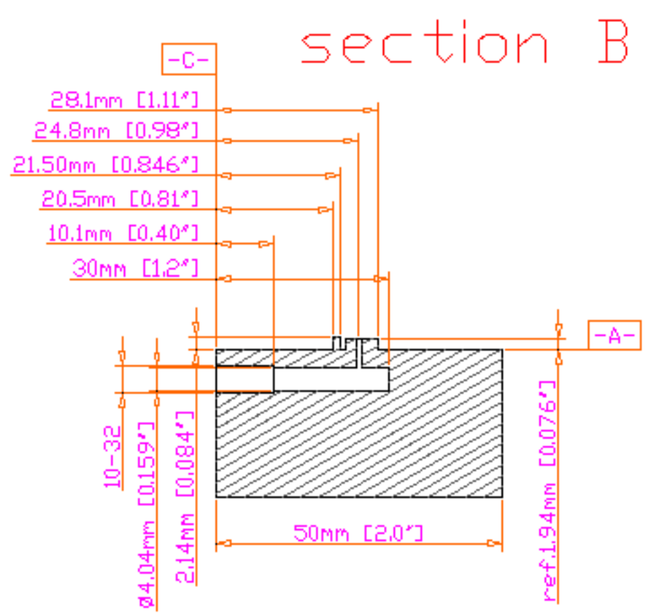

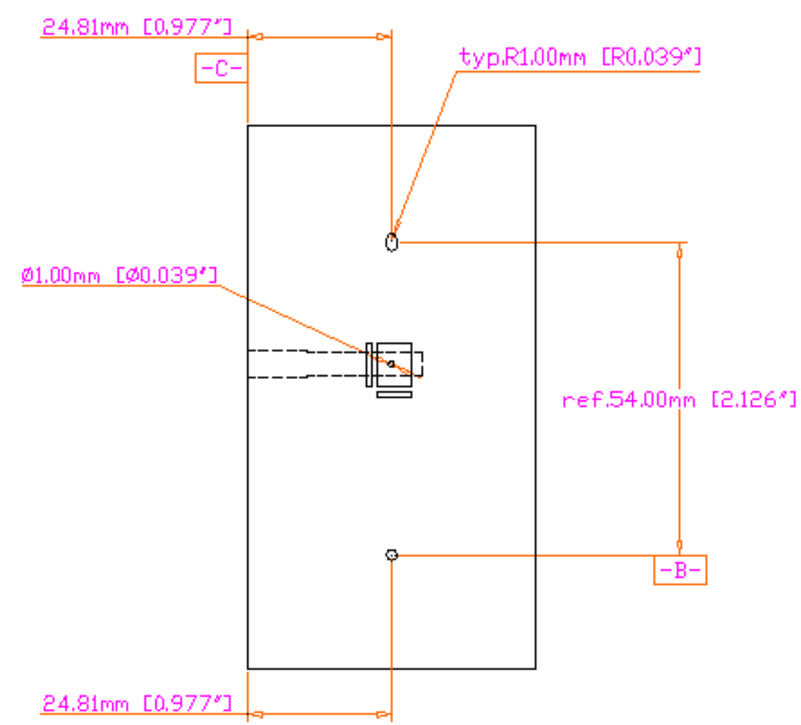

UNLESS OTHERWISE SPECIFIED: DIMENSIONS ARE IN mm [inch] TOLERANCES DECIMALS X ± .25 mm .X ± .13 mm .XX ± .05 mm .XXX ± .03 mm ANGULAR ± 0.5° DO NOT SCALE DRAWING	Lawrence Berkeley National Laboratory		
	ATLAS SCT Detector Module Multi Purpose Fixture Chip Holder		
NA			
Hard anodize black	ag0402	–	10 Oct 01
PART 402	NO. REQ'D 1	Fred Goozen	510 486 6924
0	00	10 Oct 01	510 486 7111
0	00	10 Oct 01	FRGoozen@lbl.gov
		Aluminum Tooling Plate	P-1-AP-31