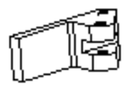

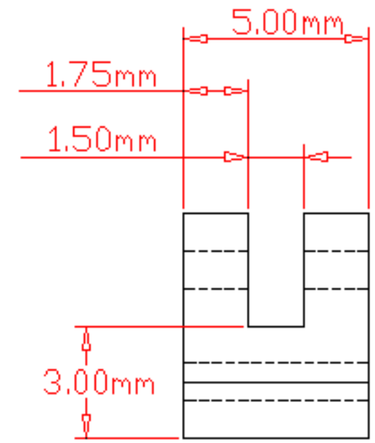

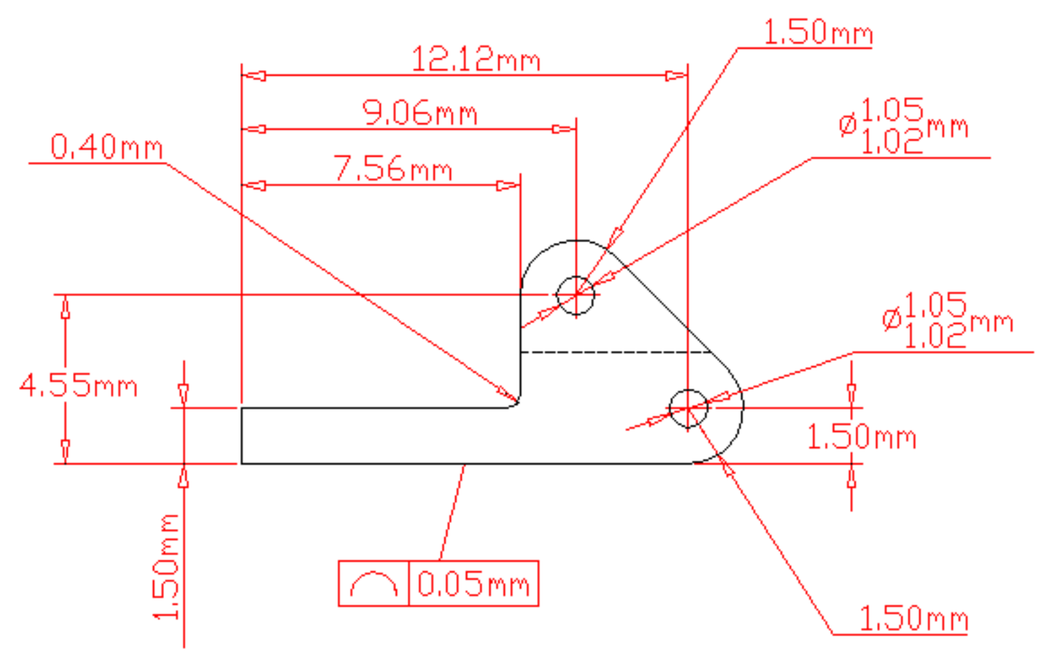

UNLESS OTHERWISE SPECIFIED: DIMENSIONS ARE IN mm [Inch] TOLERANCES DECIMALS X ± .25 mm, .X ± .13 mm, .XX ± .05 mm, .XXX ± .03 mm; ANGULAR ± 0.5° DO NOT SCALE DRAWING	Lawrence Berkeley National Laboratory		
DATE NEEDED NA	ATLAS SCT Detector Module Pickup Tool Foot		
SURFACE TREATMENT none	DWG NO. ag0396	REV –	REV DATE 03 Oct 01
PART 396	NO. REQ'D 4	DRAWN BY Fred Goozen	PHONE 510 486 6924
0	00	START DATE 03 Oct 01	FAX 510 486 7111
0	00	LAST CHANGED 03 Oct 01	E-MAIL FRGoozen@lbl.gov
0	00	MATERIAL 6061-T6	ACCOUNT P-1-AP-31