aluminum	A	8
abs plastic	B	2
abs plastic	C	2
steel	D	4

UNLESS OTHERWISE SPECIFIED DIMENSIONS ARE IN mm [inch]
TOLERANCES
DECIMALS ANGULAR
X ± .XX mm ± 0.5°
X.X ± .XX mm
X.XX ± .XX mm
X.XXX ± .XX mm
DO NOT SCALE DRAWING

DATE NEEDED: NA

MATERIAL: TBAM

Lawrence Berkeley National Laboratory

ATLAS, Pixel
Hybird Hypotter
Proposed Fixture

DWG NO.: ag0352 | REV: – | REV DATE: 00 Mmm 97

DRAWN BY: Fred Goozen | PHONE: 510 486 6924

START DATE: 27 Mar 01 | FAX: 510 486 5401

LAST CHANGED: 10 Apr 01 | E-MAIL: FRGoozen@lbl.gov
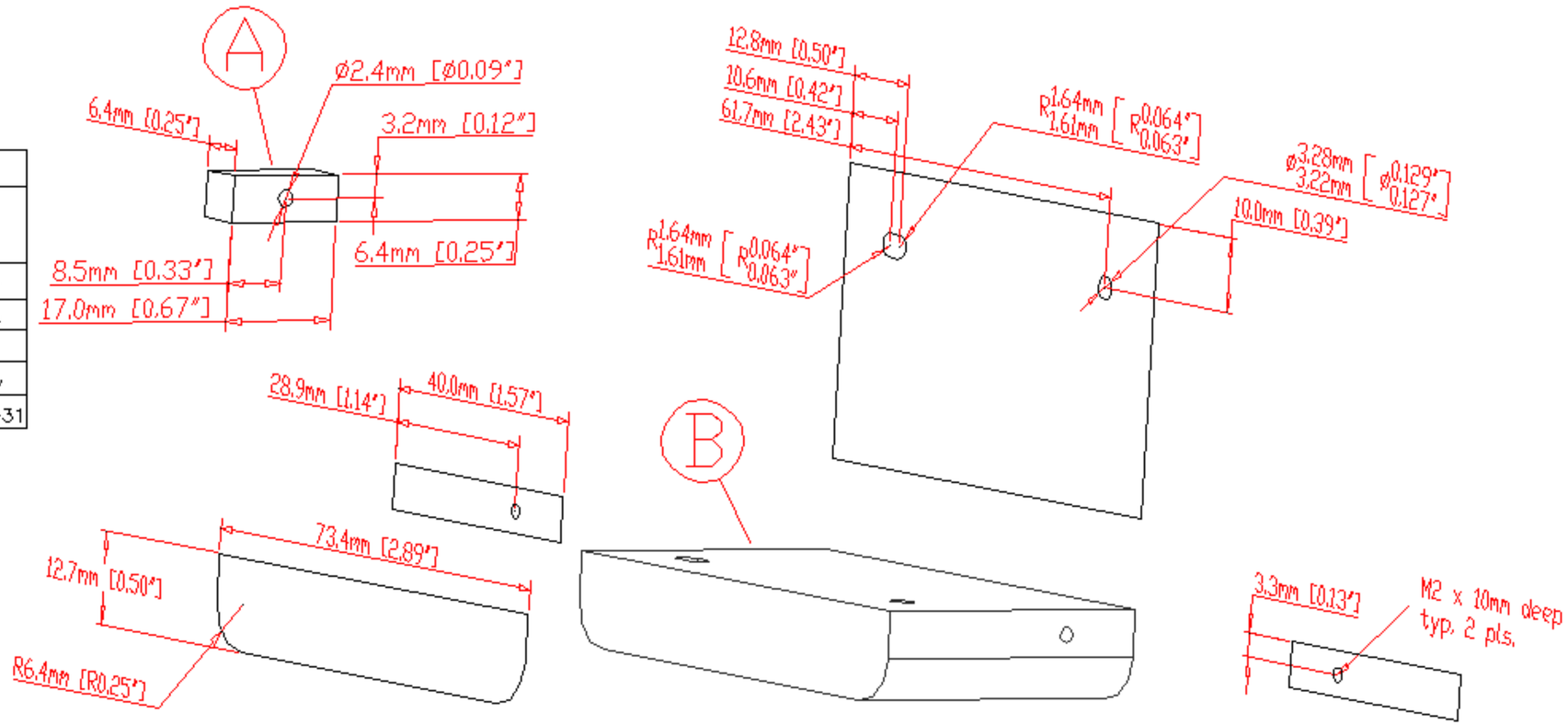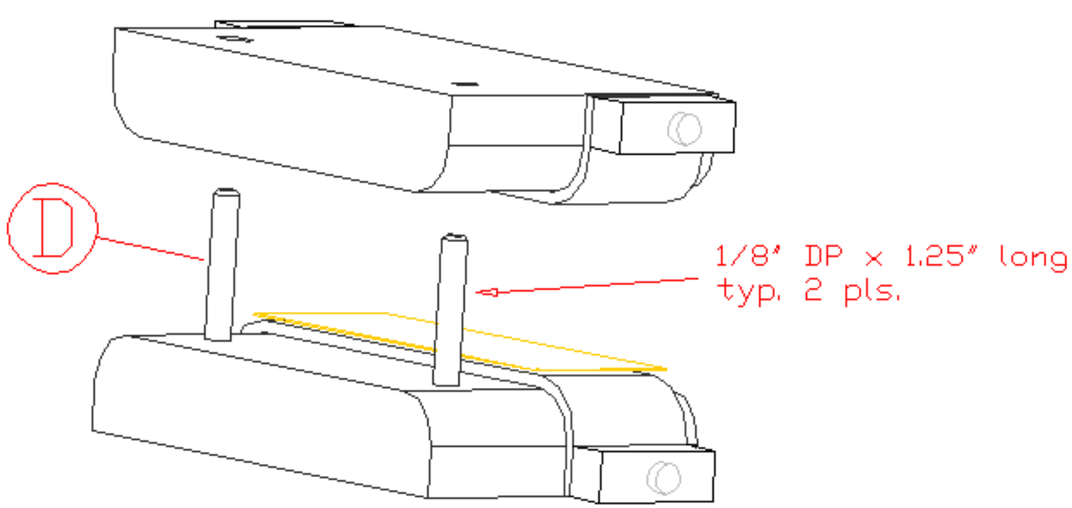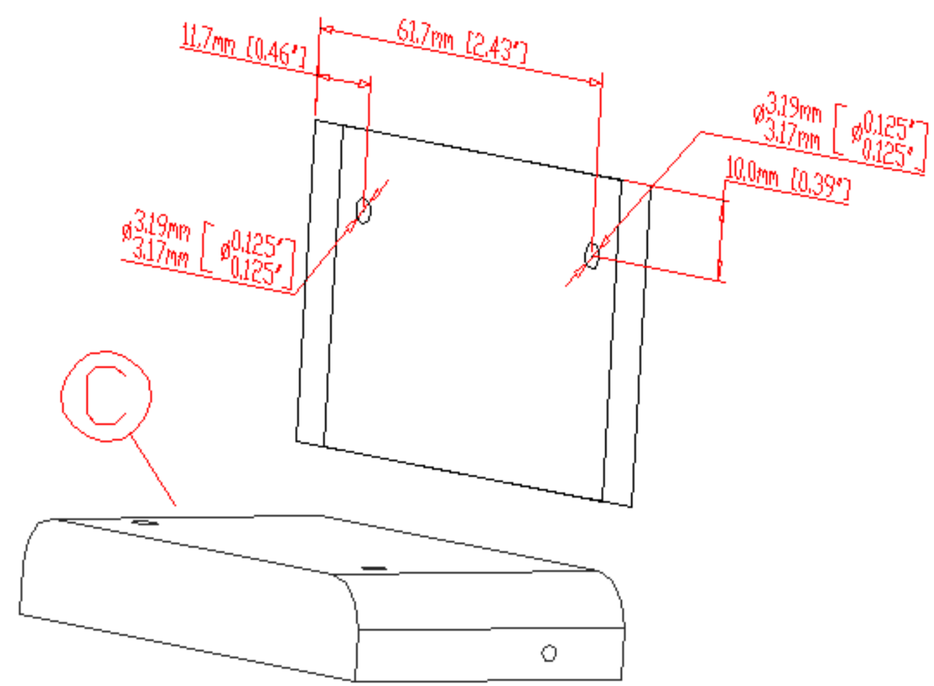
MATERIAL: NA | ACCOUNT: P-1-AP-31