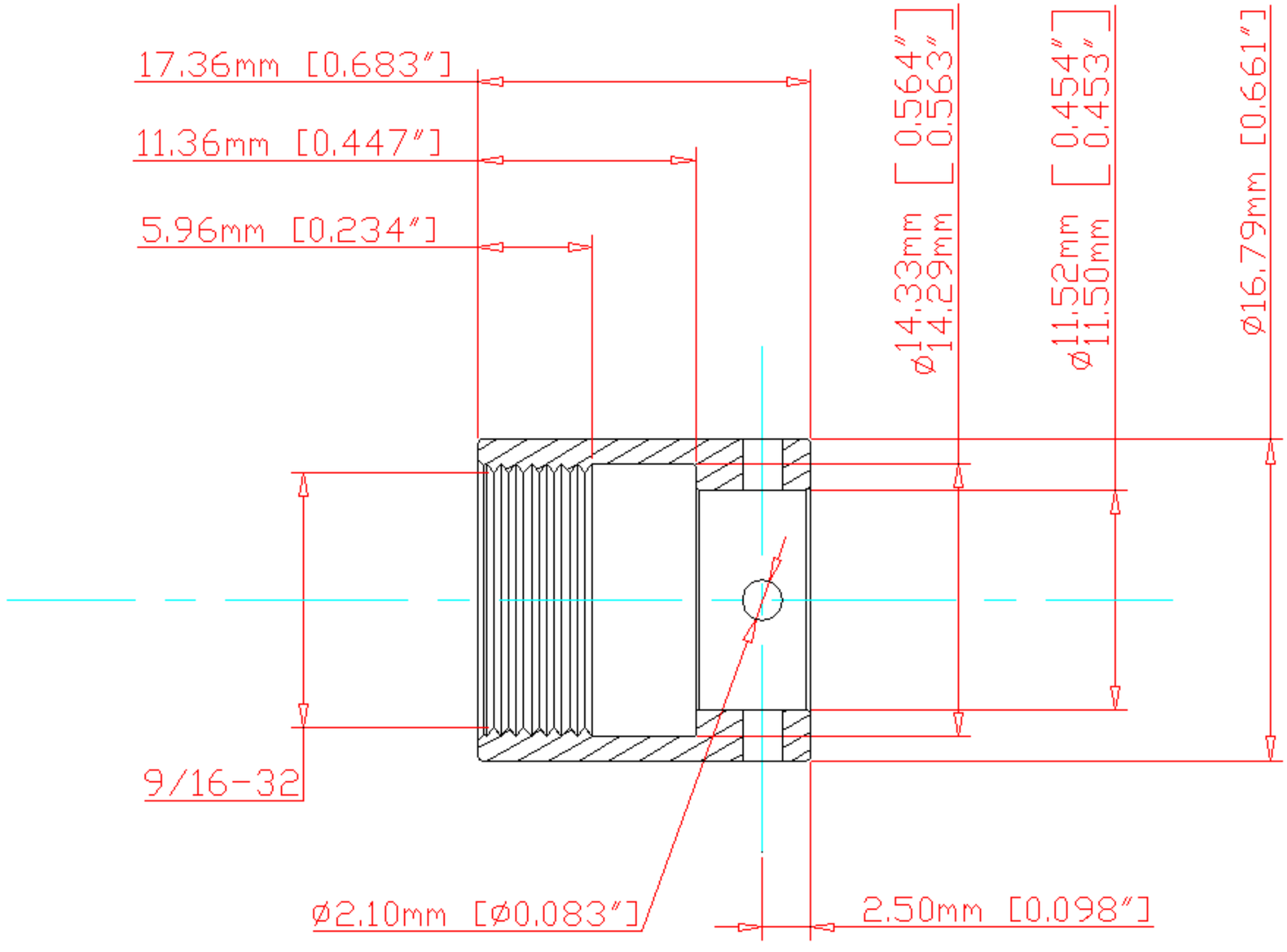

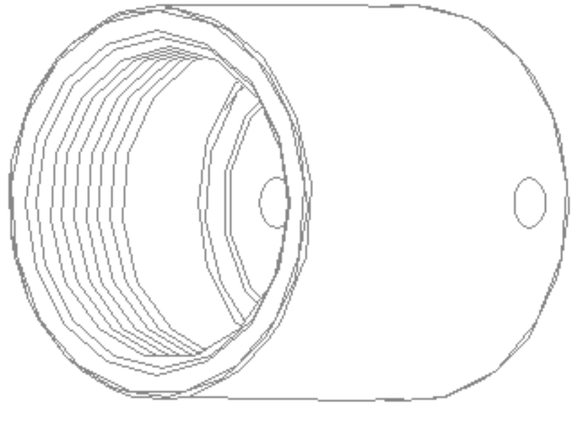

UNLESS OTHERWISE SPECIFIED DIMENSIONS ARE IN mm [inch] TOLERANCES DECIMALS ANGULAR .X ± .25 mm ± 0.5° .XX ± .13 mm .XXX ± .05 mm .XXX ± .03 mm DO NOT SCALE DRAWING		Lawrence Berkeley National Laboratory		
		ATLAS, Pixel Cooling Tube Connector Luer-Lock type WELDABLE Nut		
DATE NEEDED	NA			
SURFACE TREATMENT	[illegible]	DWG NO. ag0345j	REV –	REV DATE 00 Mmm 97
PART	NO. REQ'D	MATERIAL	DRAWN BY Fred Goozen	PHONE 510 486 6924
1	0	6061-T6	START DATE 23 Jul 01	FAX 510 486 7111
–	0	–	LAST CHANGED 23 Jul 01	E-MAIL FRGoozen@lbl.gov
–	0	–		ACCOUNT P-1-AP-31