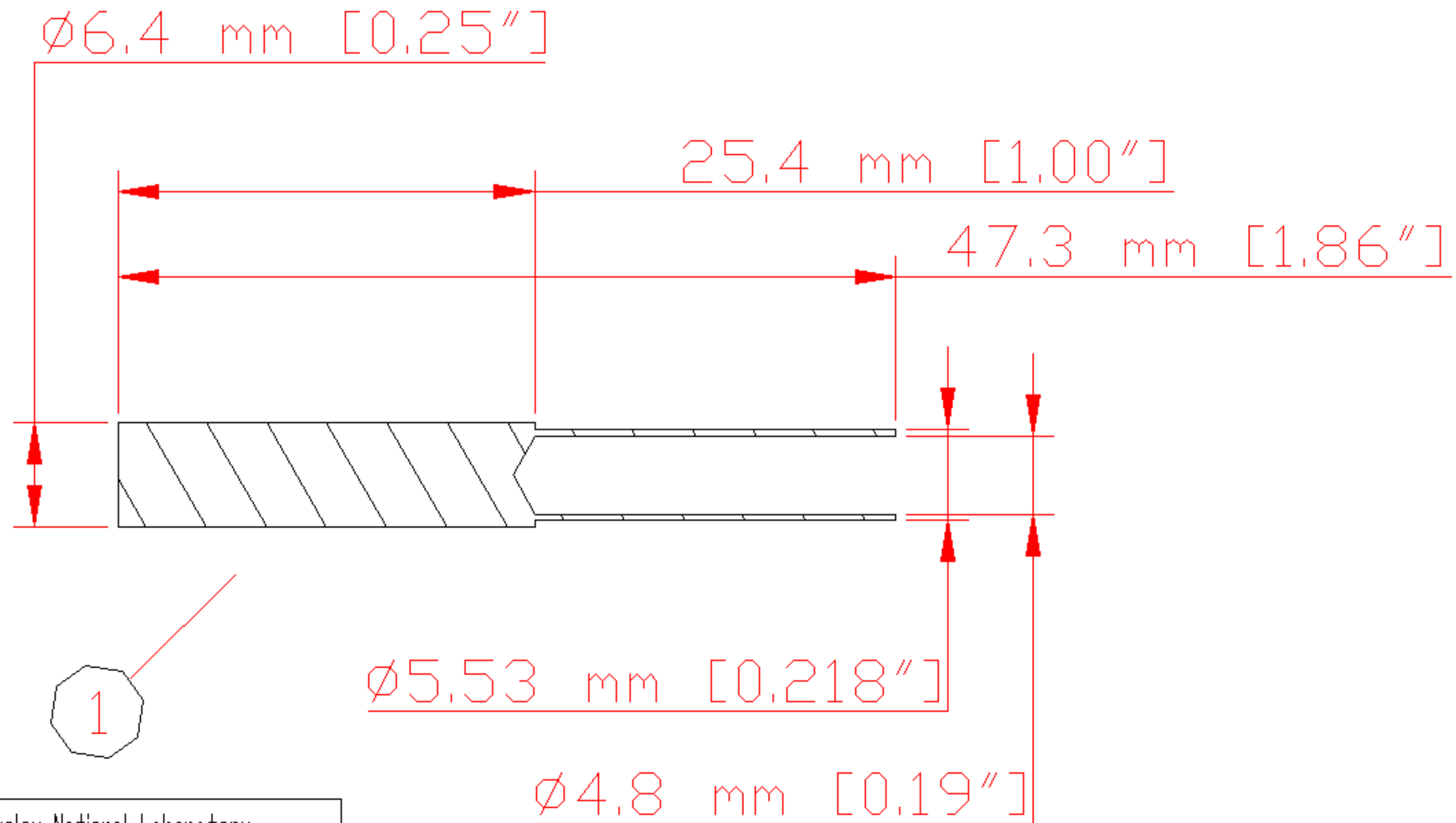

UNLESS OTHERWISE SPECIFIED: DIMENSIONS ARE IN mm [Inch] TOLERANCES DECIMALS X ± .25 mm .X ± .13 mm .XX ± .05 mm .XXX ± .03 mm ANGULAR ± 0.5° DO NOT SCALE DRAWING	Lawrence Berkeley National Laboratory		
DATE NEEDED NA	ATLAS, Pixel Cooling Tube Connector Luer-Lock type Proposed		
SURFACE TREATMENT none	DWG NO. ag0345c1	REV –	REV DATE 00 Mmm 97
PART / NO. REQ'D	DRAWN BY Fred Goozen	PHONE 510 486 6924	
1 / 12	START DATE 6 Mar 01	FAX 510 486 7111	
0 / 0	LAST CHANGED 2 Apr 01	E-MAIL FRGoozen@lbl.gov	
0 / 0	MATERIAL 6061-T6	ACCOUNT P-1-AP-31	