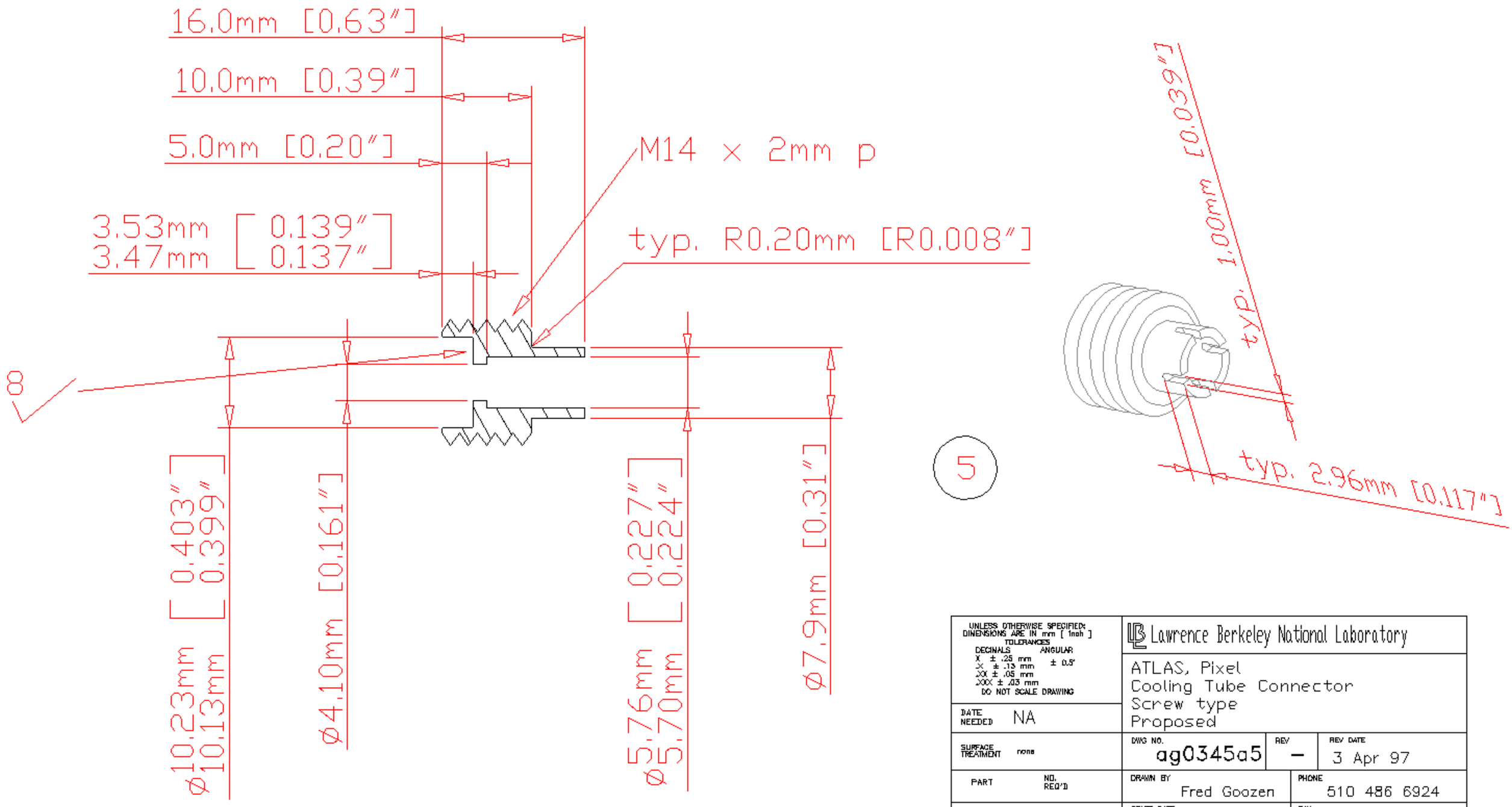


| | | | |
|---|---|---|---|
| UNLESS OTHERWISE SPECIFIED: DIMENSIONS ARE IN mm [ inch ] TOLERANCES DECIMALS X ± .25 mm, X ± .13 mm, .XX ± .05 mm, .XXX ± .03 mm; ANGULAR ± 0.5° DO NOT SCALE DRAWING | Lawrence Berkeley National Laboratory | | |
| DATE NEEDED NA | ATLAS, Pixel Cooling Tube Connector Screw type Proposed | | |
| SURFACE TREATMENT none | DWG NO. ag0345a5 | REV – | REV DATE 3 Apr 97 |
| PART / NO. REQ'D | DRAWN BY Fred Goozen | | PHONE 510 486 6924 |
| 5 / 6 | START DATE 6 Mar 01 | | FAX 510 486 7111 |
| 0 / 00 | LAST CHANGED 3 Apr 01 | | E-MAIL FRGoozen@lbl.gov |
| 0 / 00 | MATERIAL 6061-T6 | | ACCOUNT P-1-AP-31 |