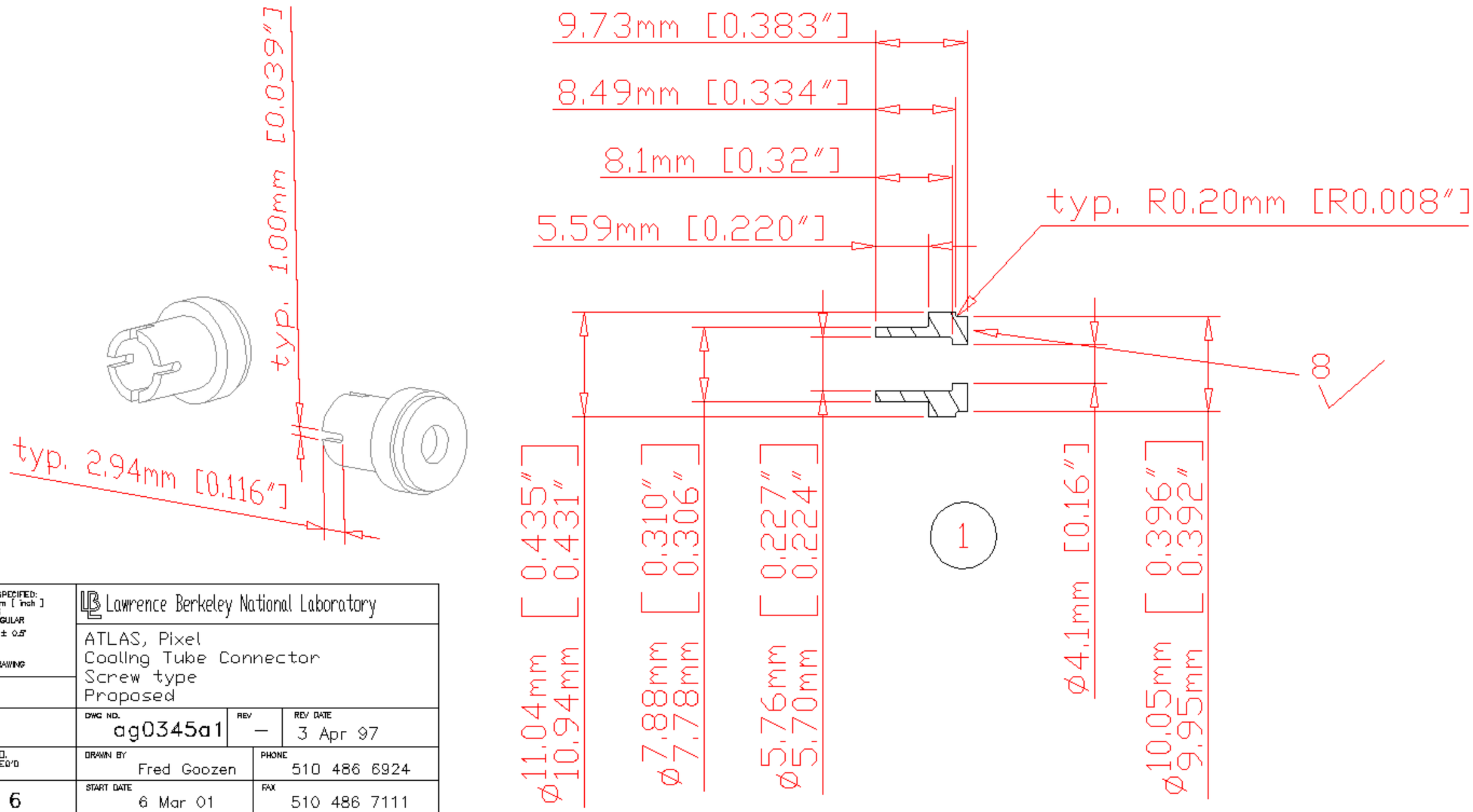

UNLESS OTHERWISE SPECIFIED: DIMENSIONS ARE IN mm [inch] TOLERANCES DECIMALS X ± .25 mm .X ± .13 mm .XX ± .05 mm .XXX ± .03 mm ANGULAR ± 0.5° DO NOT SCALE DRAWING	Lawrence Berkeley National Laboratory		
DATE NEEDED NA	ATLAS, Pixel Cooling Tube Connector Screw type Proposed		
SURFACE TREATMENT none	DWG NO. ag0345a1	REV –	REV DATE 3 Apr 97
PART / NO. REQ'D	DRAWN BY Fred Goozen		PHONE 510 486 6924
1 / 6	START DATE 6 Mar 01		FAX 510 486 7111
0 / 00	LAST CHANGED 3 Apr 01		E-MAIL FRGoozen@lbl.gov
0 / 00	MATERIAL 6061-T6		ACCOUNT P-1-AP-31