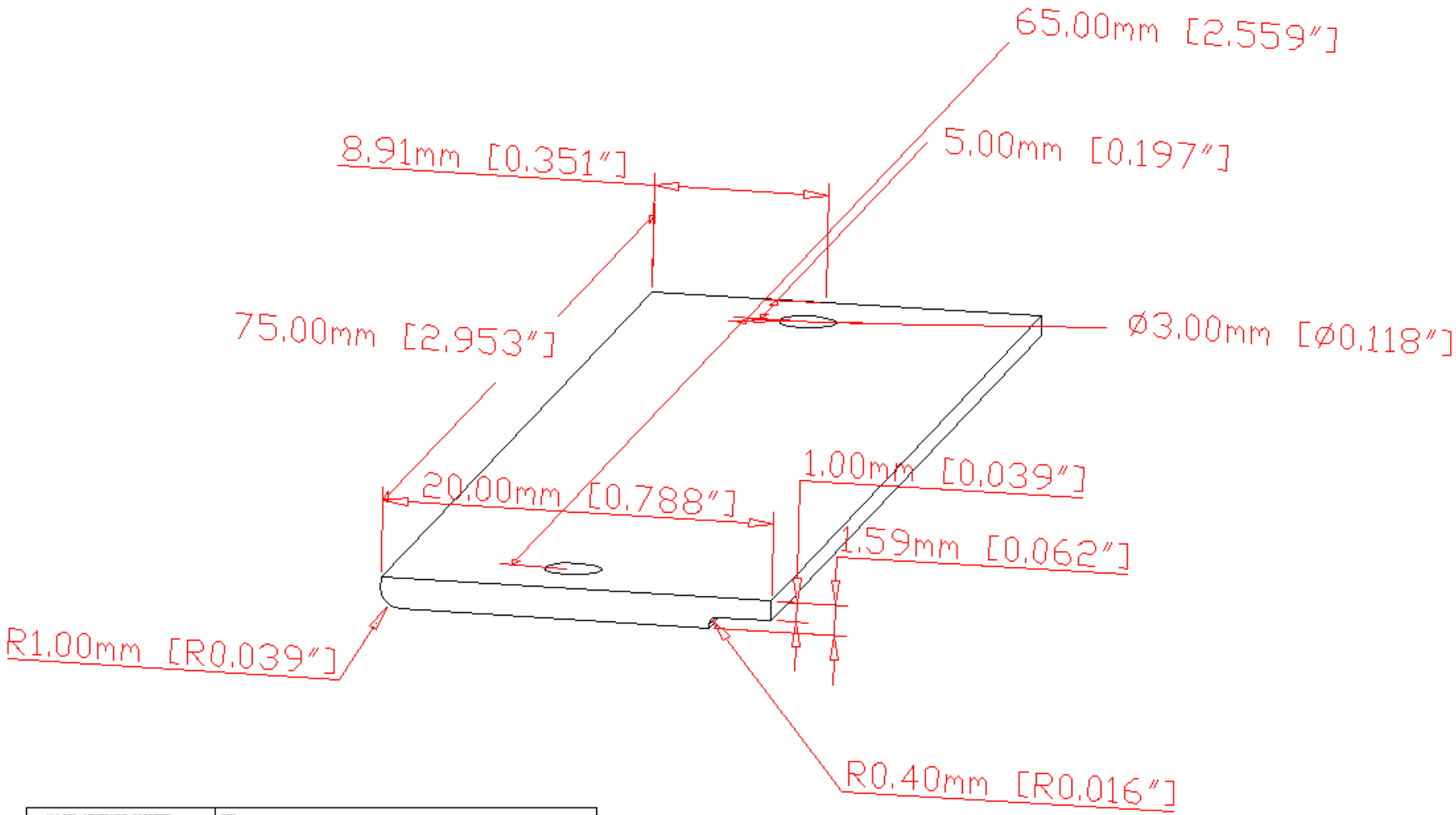

UNLESS OTHERWISE SPECIFIED: DIMENSIONS ARE IN mm [inch] TOLERANCES DECIMALS X ± .25 mm .X ± .13 mm .XX ± .05 mm .XXX ± .03 mm ANGULAR ± 0.5° DO NOT SCALE DRAWING	Lawrence Berkeley National Laboratory		
DATE NEEDED ASAP	ATLAS, Pixel Hybrid Trimmer Flex Support		
SURFACE TREATMENT none	DWG NO. ag0333d	REV –	REV DATE 00 Mmm 97
PART / NO. REQ'D	DRAWN BY Fred Goozen	PHONE 510 486 6924	
4 / 4	START DATE 13 Feb 01	FAX 510 486 5401	
0 / 00	LAST CHANGED 23 Mar 01	E-MAIL FRGoozen@lbl.gov	
0 / 00	MATERIAL TOOL STEEL	ACCOUNT P-1-AP-31	