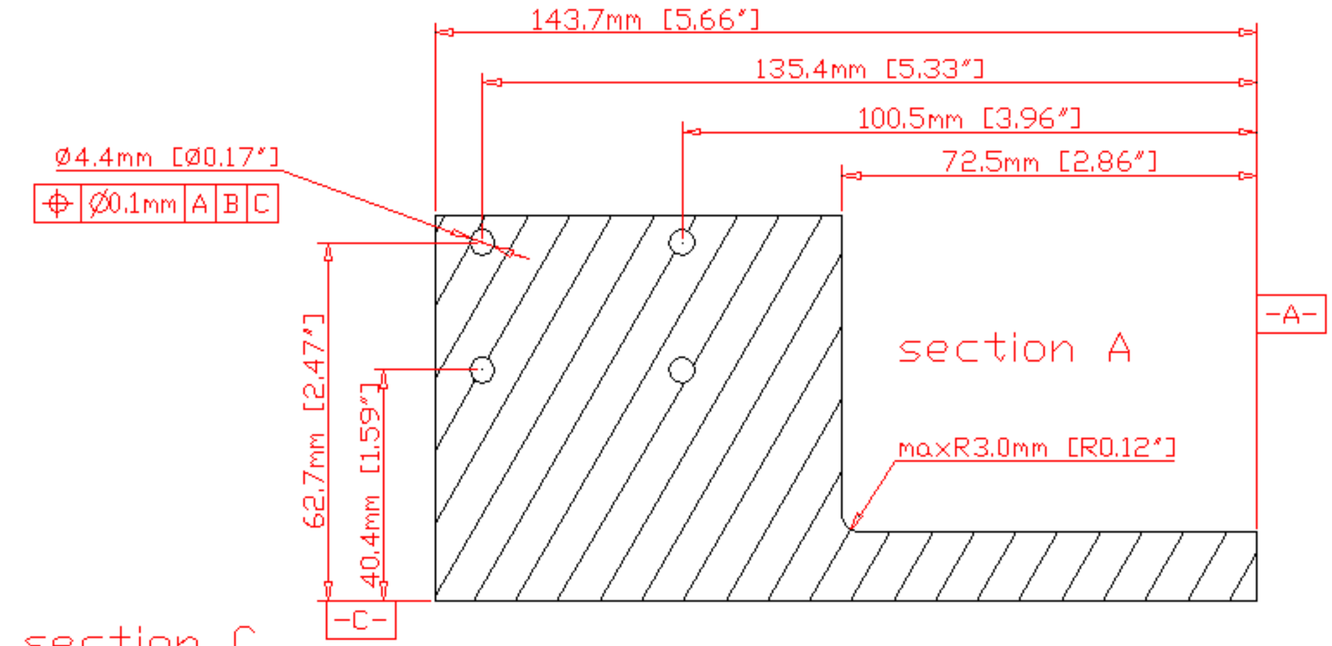

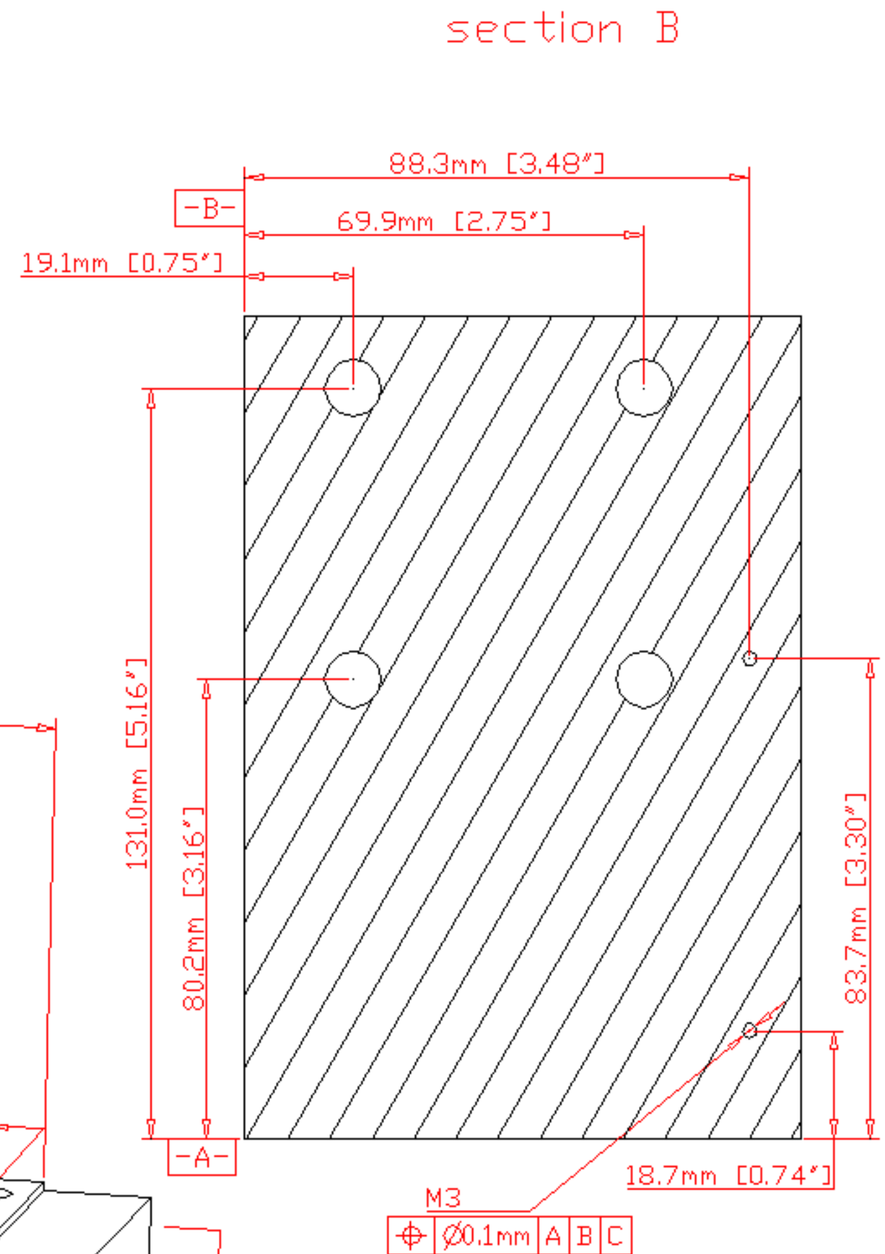

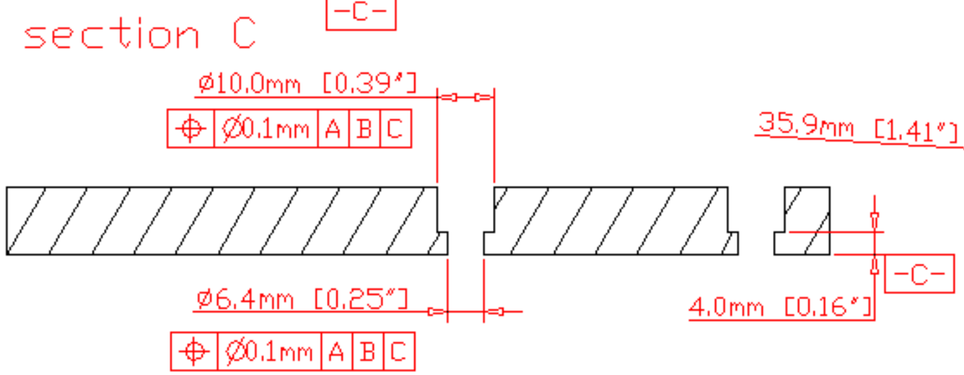

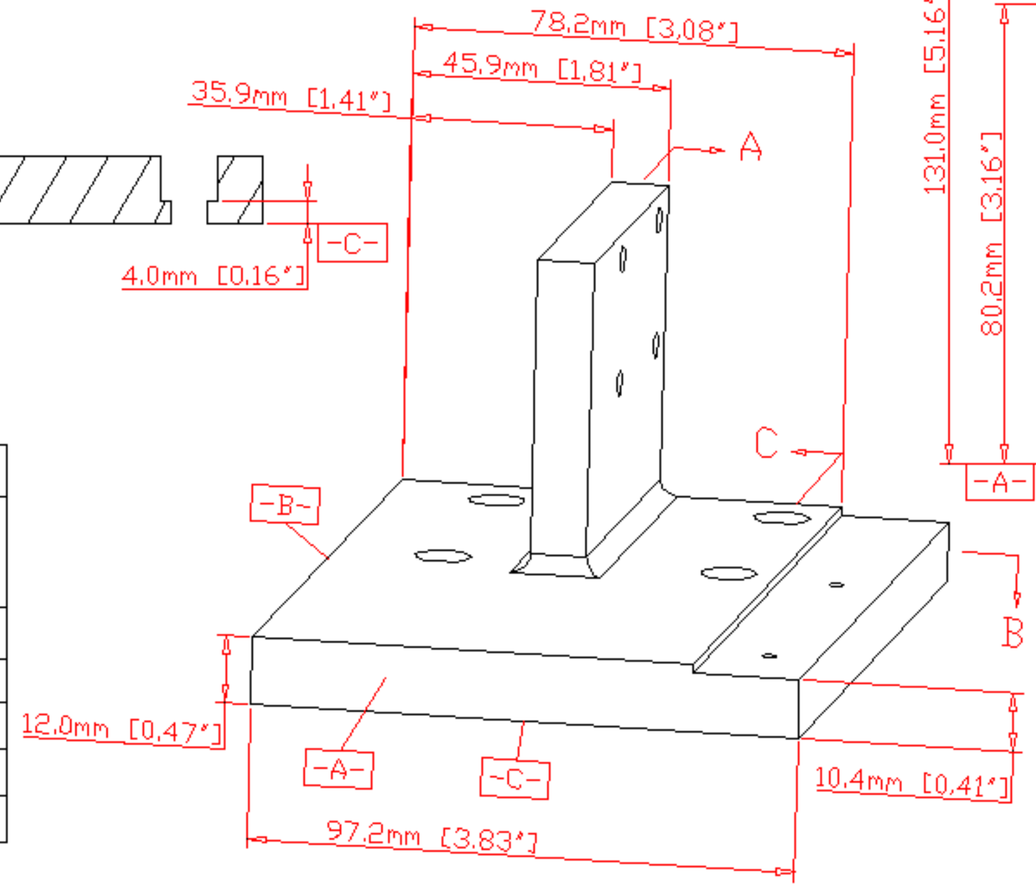

UNLESS OTHERWISE SPECIFIED: DIMENSIONS ARE IN mm [inch] TOLERANCES: DECIMALS X ± .20 mm, .X ± .13 mm, .XX ± .05 mm, .XXX ± .03 mm; ANGULAR ± 0.5°; DO NOT SCALE DRAWING	Lawrence Berkeley National Laboratory		
DATE NEEDED ASAP	ATLAS, Pixel Hybrid Trimmer Body		
SURFACE TREATMENT none	DWG NO. ag0333c	REV –	REV DATE 00 Mmm 97
PART / NO. REQ'D	DRAWN BY Fred Goozen		PHONE 510 486 6924
3 / 4	START DATE 13 Feb 01		FAX 510 486 5401
0 / 00	LAST CHANGED 22 Mar 01		E-MAIL FRGoozen@lbl.gov
0 / 00	MATERIAL ALUMINUM		ACCOUNT P-1-AP-31