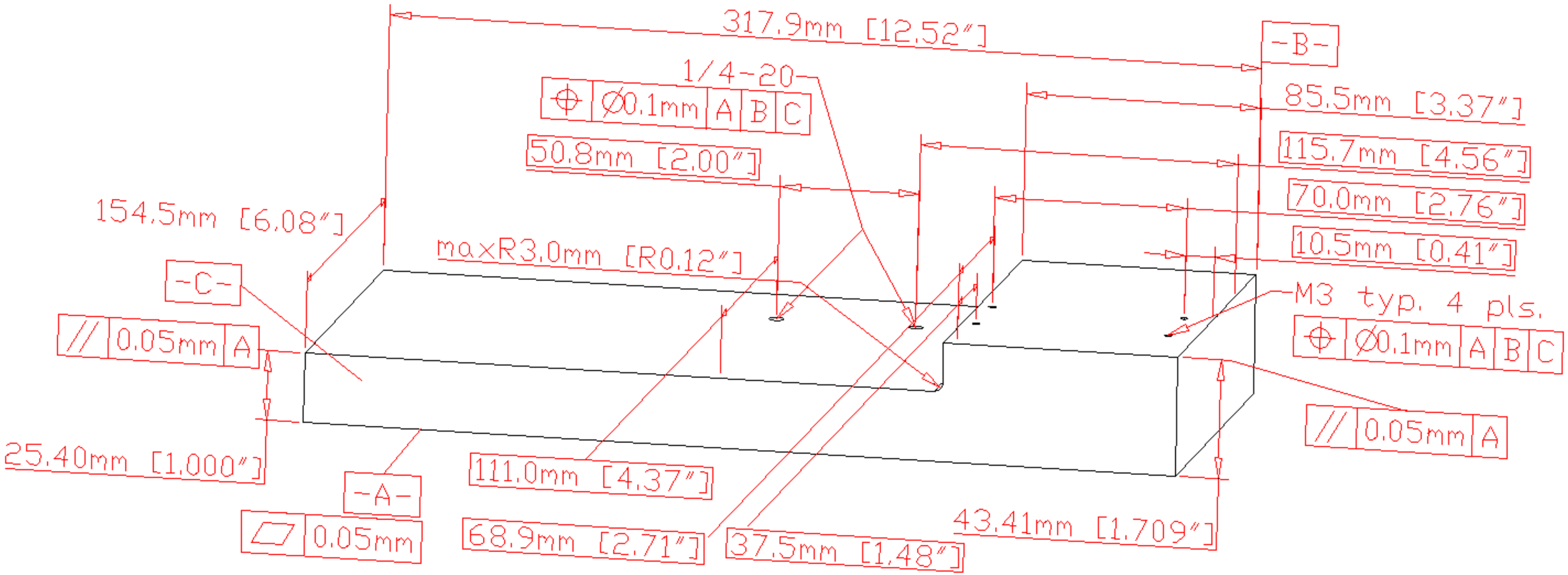

UNLESS OTHERWISE SPECIFIED: DIMENSIONS ARE IN mm [inch] TOLERANCES DECIMALS X ± .25 mm .X ± .13 mm .XX ± .05 mm .XXX ± .03 mm ANGULAR ± 0.5° DO NOT SCALE DRAWING	Lawrence Berkeley National Laboratory ATLAS, Pixel Hybrid Trimmer Base
DATE NEEDED ASAP	
SURFACE TREATMENT none	DWG NO. ag0333b · REV — · REV DATE 00 Mmm 97
PART · NO. REQ'D	DRAWN BY Fred Goozen · PHONE 510 486 6924
2 · 4	START DATE 13 Feb 01 · FAX 510 486 5401
0 · 00	LAST CHANGED 20 Mar 01 · E-MAIL FRGoozen@lbl.gov
0 · 00	MATERIAL ALUMINUM · ACCOUNT P-1-AP-31