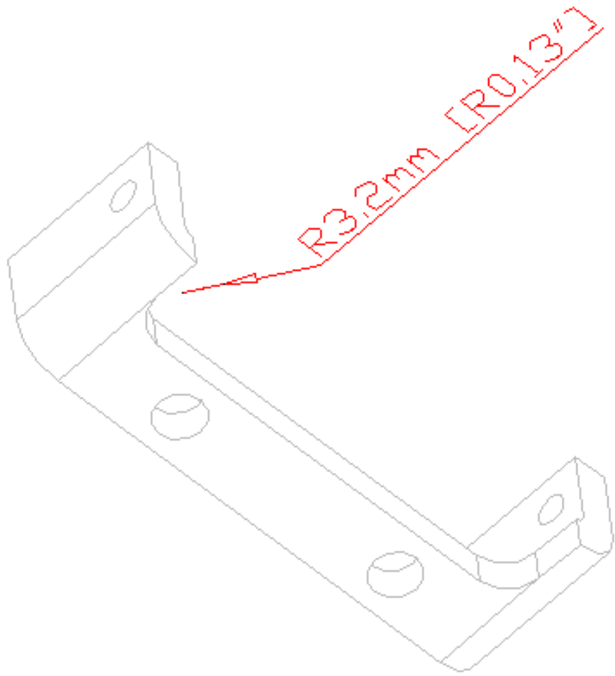

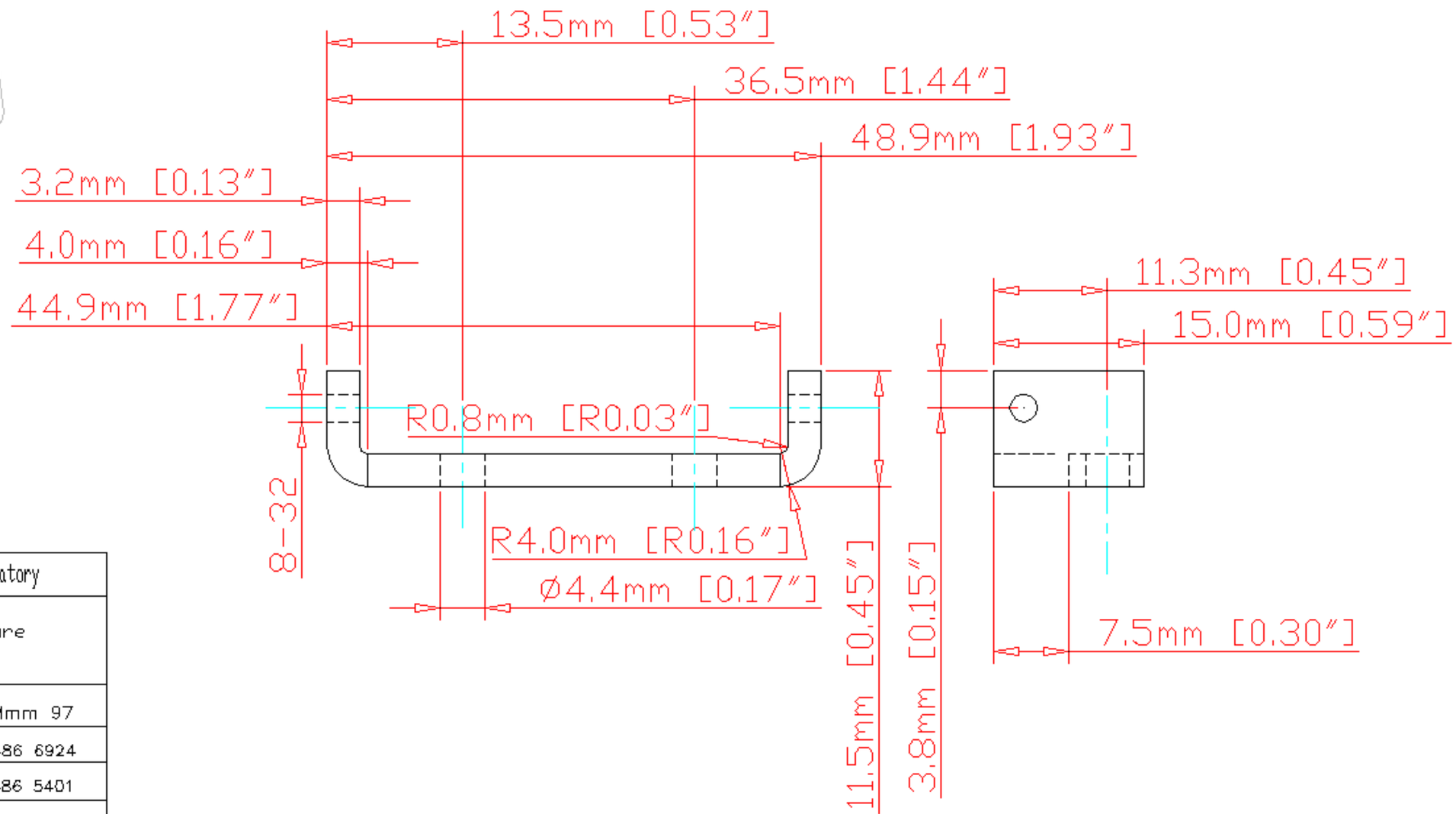

UNLESS OTHERWISE SPECIFIED: DIMENSIONS ARE IN mm [inch] TOLERANCES DECIMALS X ± .25 mm .X ± .13 mm .XX ± .08 mm .XXX ± .03 mm ANGULAR ± 0.5 DO NOT SCALE DRAWING	Lawrence Berkeley National Laboratory		
DATE NEEDED ASAP	ATLAS, Pixel Support Frame Drill Fixture Slide Stop		
SURFACE TREATMENT none	DWG NO. ag0322	REV –	REV DATE 00 Mmm 97
PART / NO. REQ'D	DRAWN BY Fred Goozen		PHONE 510 486 6924
U 8	START DATE 18 Jan 01		FAX 510 486 5401
0 00	LAST CHANGED 27 Feb 01		E-MAIL FRGoozen@lbl.gov
0 00	MATERIAL aluminum		ACCOUNT P-1-AP-31