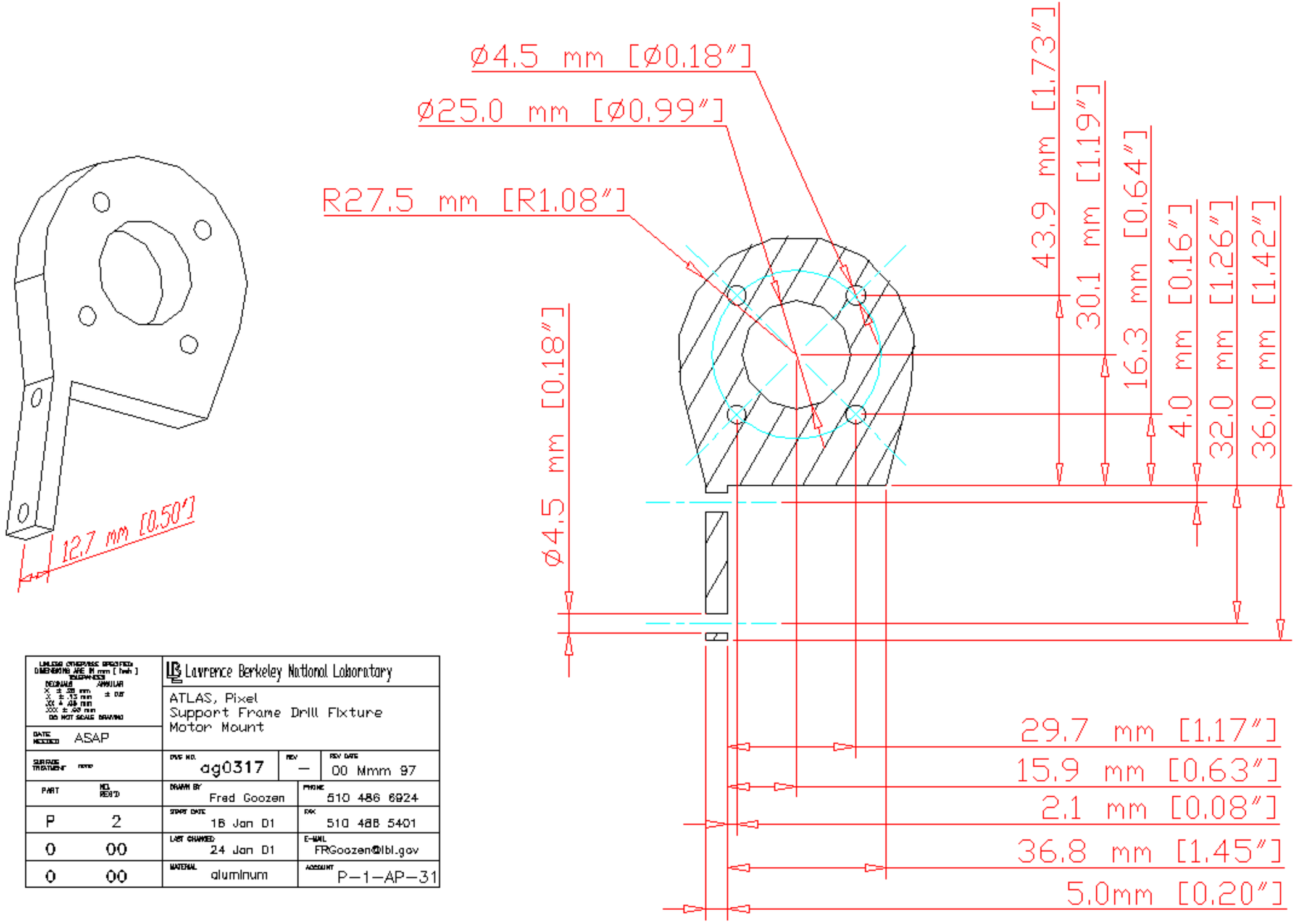

UNLESS OTHERWISE SPECIFIED DIMENSIONS ARE IN mm [hwh] TOLERANCES DECIMALS ANGULAR X ± .25 mm ± 0.5° .X ± .13 mm .XX ± .08 mm .XXX ± .05 mm DO NOT SCALE DRAWING	Lawrence Berkeley National Laboratory		
DATE NEEDED ASAP	ATLAS, Pixel Support Frame Drill Fixture Motor Mount		
SURFACE TREATMENT none	DWG NO. ag0317	REV —	REV DATE 00 Mmm 97
PART NO. REQ'D	DRAWN BY Fred Goozen	PHONE 510 486 6924	
P 2	START DATE 16 Jan 01	FAX 510 486 5401	
0 00	LAST CHANGED 24 Jan 01	E-MAIL FRGoozen@lbl.gov	
0 00	MATERIAL aluminum	ACCOUNT P-1-AP-31	