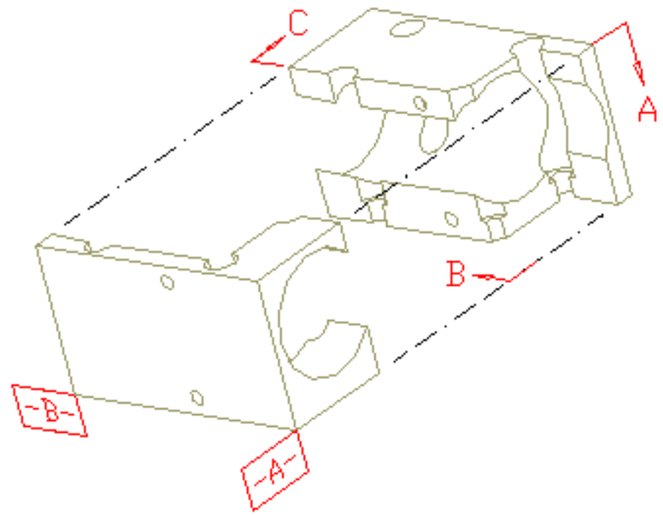

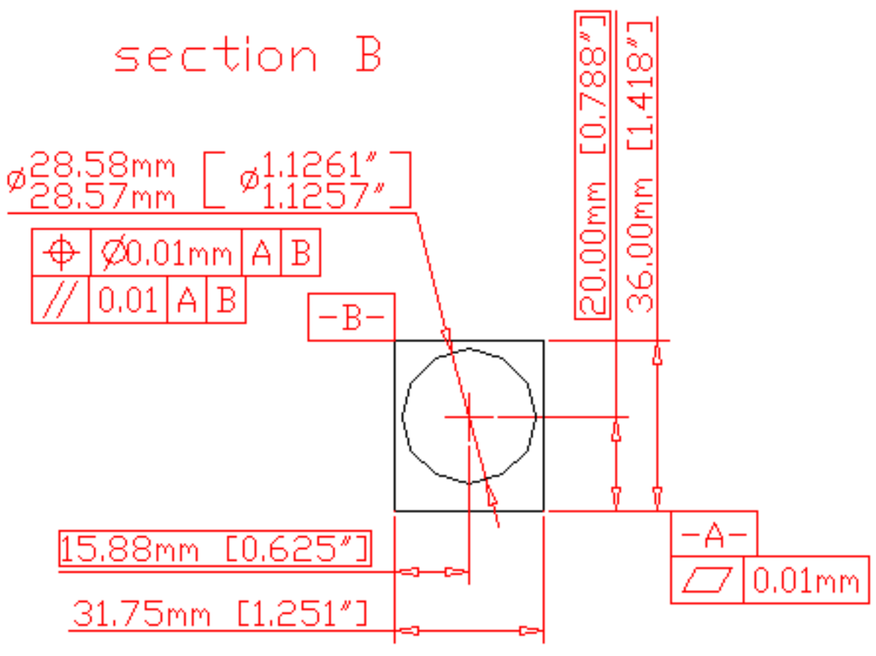

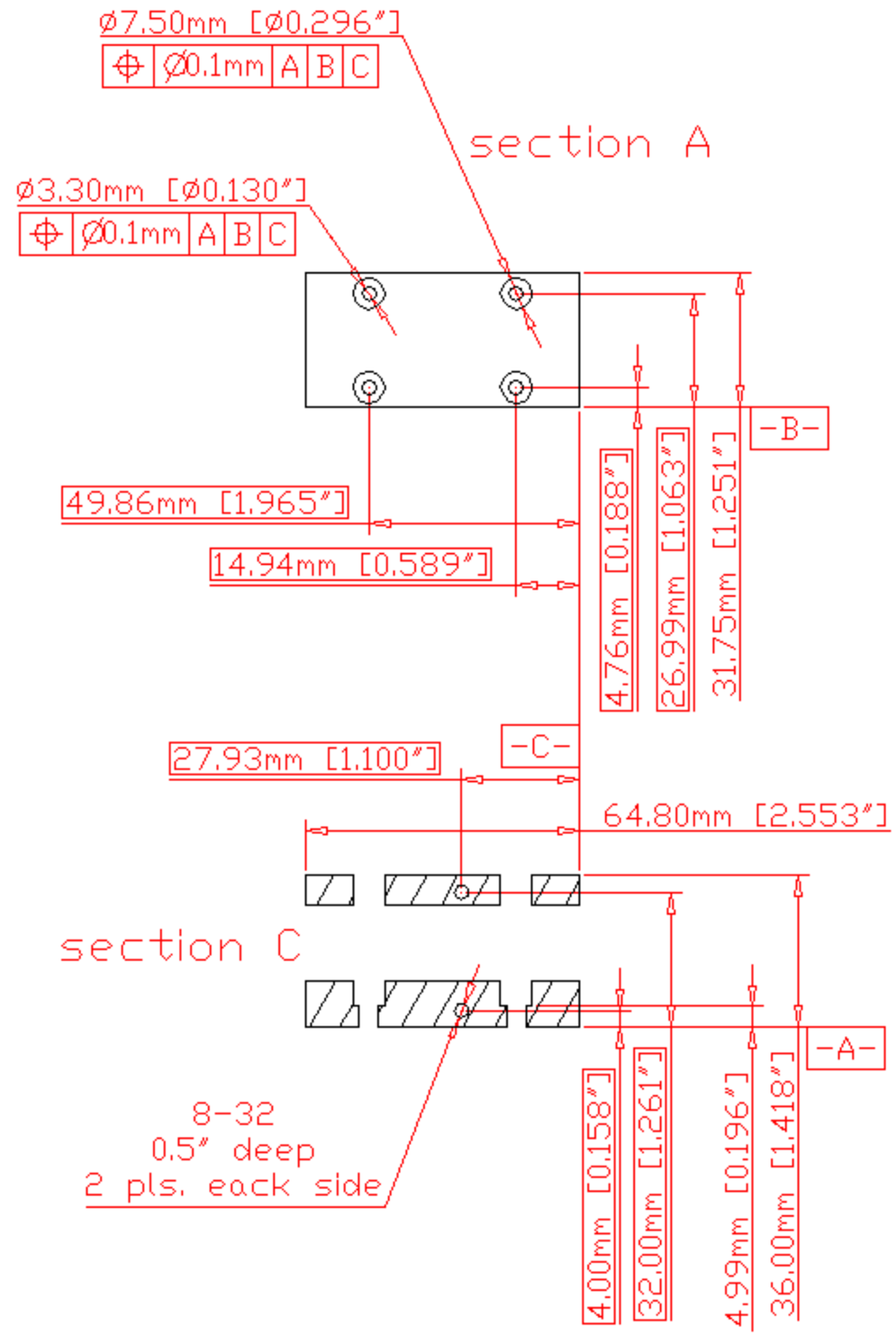

	Lawrence Berkeley National Laboratory	REVISIONS	
	ATLAS, Pixel Support Frame Drill Fixture Bearing Mount		
ASAP			
	ag0310	00 Nmm 97	
	Fred Geezen	510 486 6924	
1 B	10 Jan 01	510 486 5401	
0 00	25 Jan 01	FRGeezen@lbl.gov	
0 00	aluminum	P-1-AP-31	