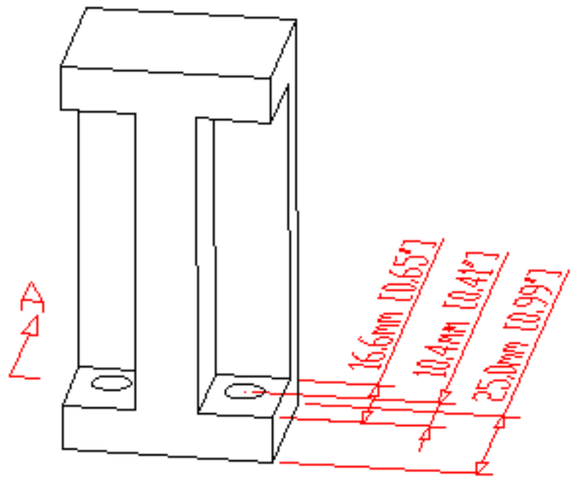

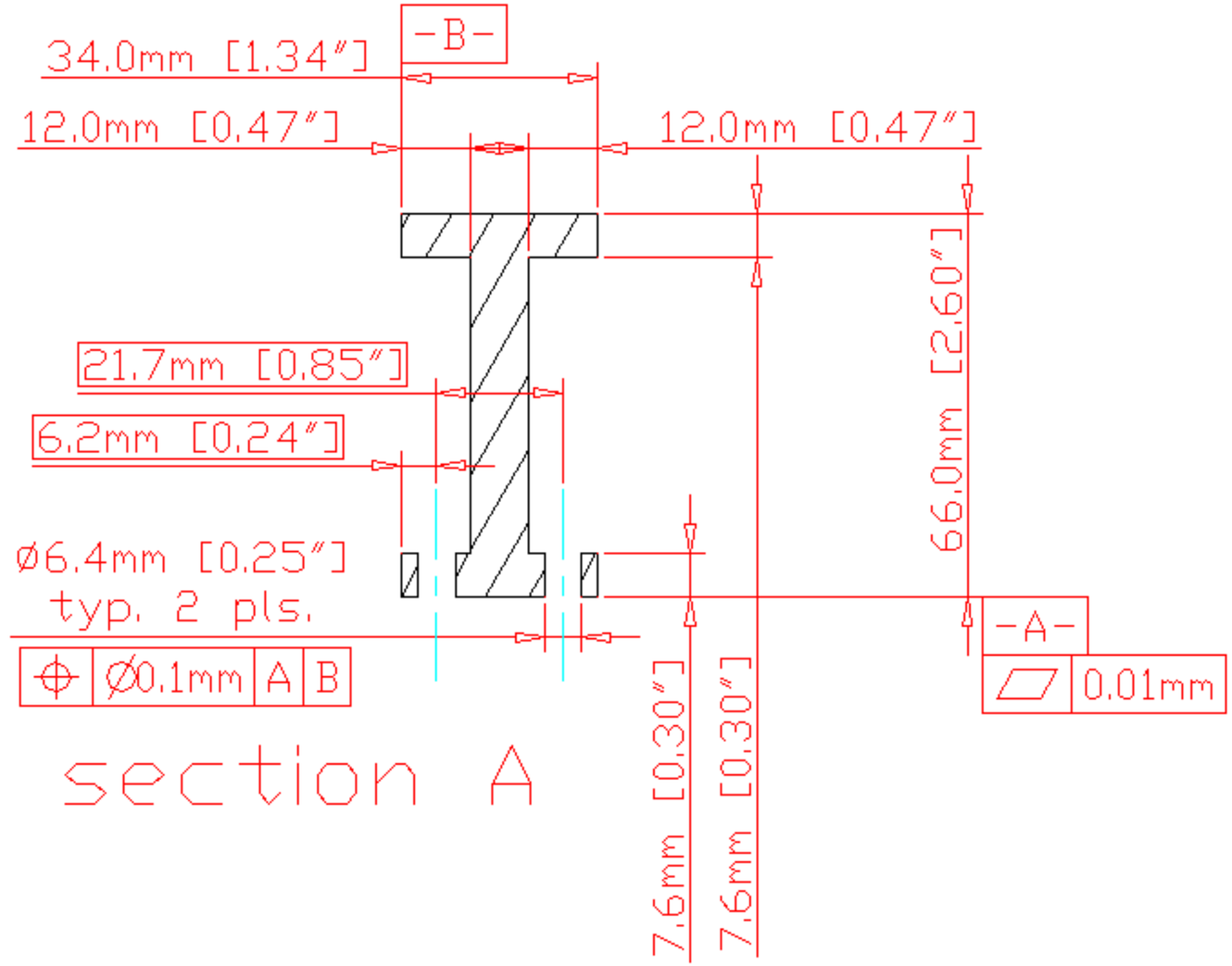

UNLESS OTHERWISE SPECIFIED DIMENSIONS ARE IN mm [inch] TOLERANCES DECIMALS ANGULAR X ± .25 mm ± 0.5° XX ± .13 mm XXX ± .05 mm XXX ± .127 mm DO NOT SCALE DRAWING	Lawrence Berkeley National Laboratory	REVISIONS	
DATE RECEIVED ASAP	ATLAS, Pixel Support Frame Drill Fixture Base Riser		
MATERIAL TREATMENT none	DWG NO. ag0306 / REV — / REV DATE 00 Mmm 97		
PART E / NO. REQ'D 1	DRAWN BY Fred Goozen / PHONE 510 486 6924		
0 / 00	START DATE 18 Jan 01 / FAX 510 486 5401		
0 / 00	LAST CHANGED 22 Jan 01 / E-MAIL FRGoozen@lbl.gov		
	MATERIAL aluminum / ACCOUNT P-1-AP-31		