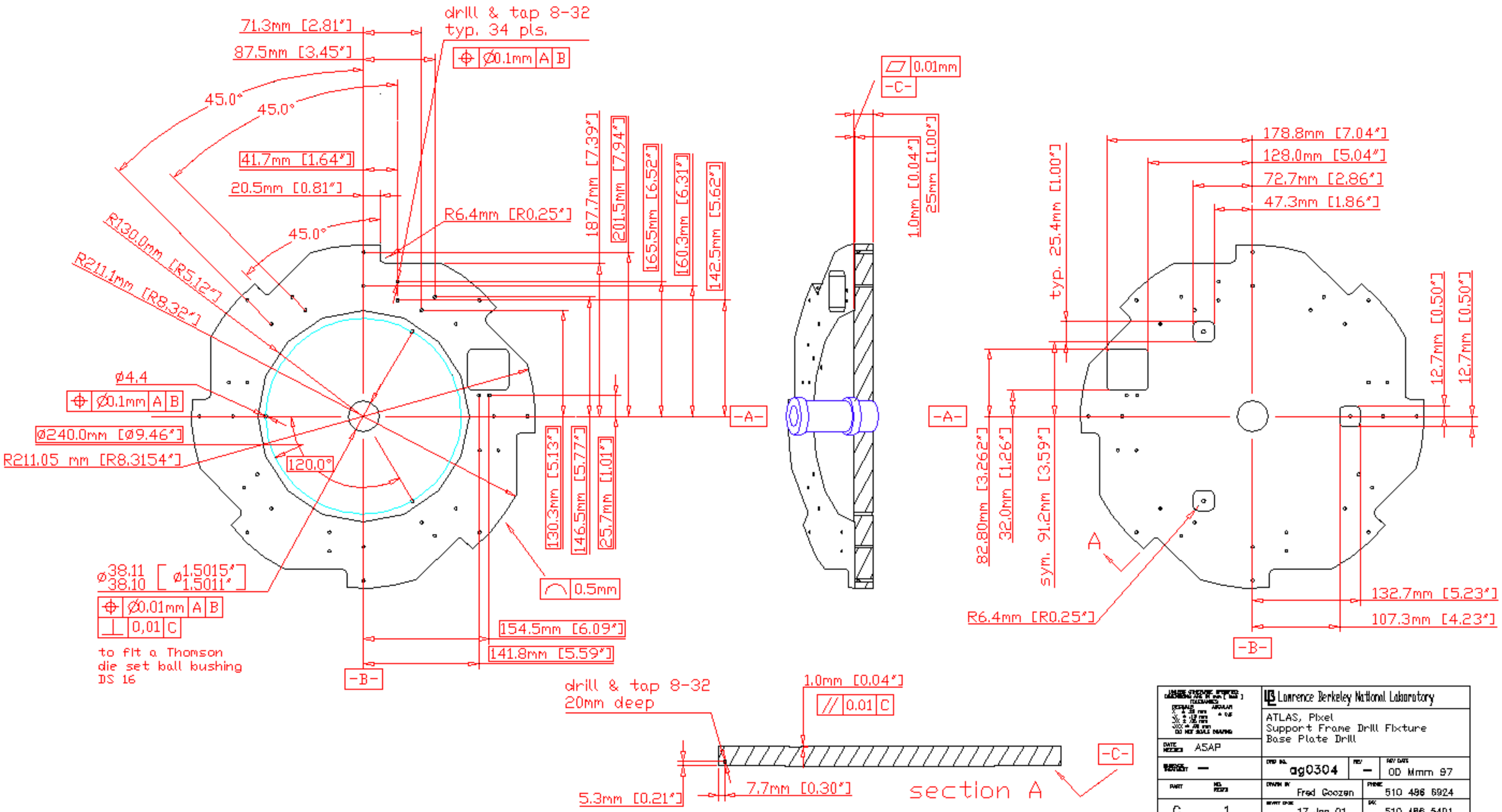

	Lawrence Berkeley National Laboratory		
	ATLAS, Pixel Support Frame Drill Fixture Base Plate Drill		
DATE NEEDED: ASAP			
SURFACE TREATMENT: —	DWG NO. ag0304	REV —	REV DATE 00 Mmm 97
PART	NO. REQ'D	DRAWN BY Fred Goozen	PHONE 510 486 6924
C	1	SHEET CODE 17 Jan 01	FAX 510 486 5401
0	00	LAST CHANGED 23 Jan 01	E-MAIL FRGoozen@lbl.gov
0	00	MATERIAL aluminum tooling plate	ACCOUNT P-1-AP-31