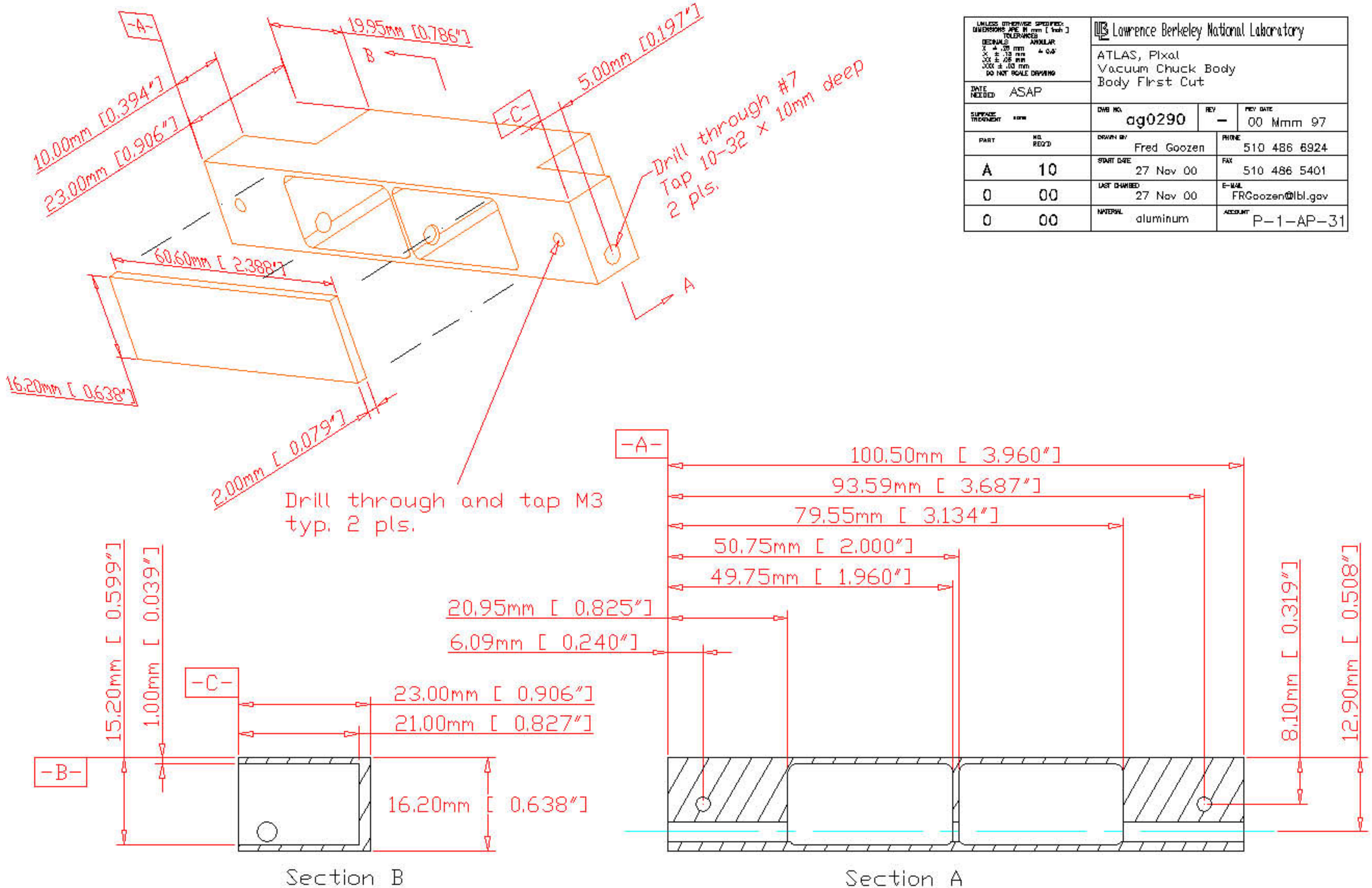

UNLESS OTHERWISE SPECIFIED:
DIMENSIONS ARE IN mm [inch]
TOLERANCES:
DECIMALS ANGULAR
X ± .20 mm ± 0.5°
.X ± .13 mm
.XX ± .05 mm
.XXX ± .03 mm
DO NOT SCALE DRAWING

DATE NEEDED: ASAP

SURFACE TREATMENT: none

PART	NO. REQ'D
A	10
0	00
0	00

Lawrence Berkeley National Laboratory

ATLAS, Pixel
Vacuum Chuck Body
Body First Cut

DWG NO. ag0290	REV –	REV DATE 00 Mmm 97
DRAWN BY Fred Goozen		PHONE 510 486 6924
START DATE 27 Nov 00		FAX 510 486 5401
LAST CHANGED 27 Nov 00		E-MAIL FRGoozen@lbl.gov
MATERIAL aluminum		ACCOUNT P-1-AP-31