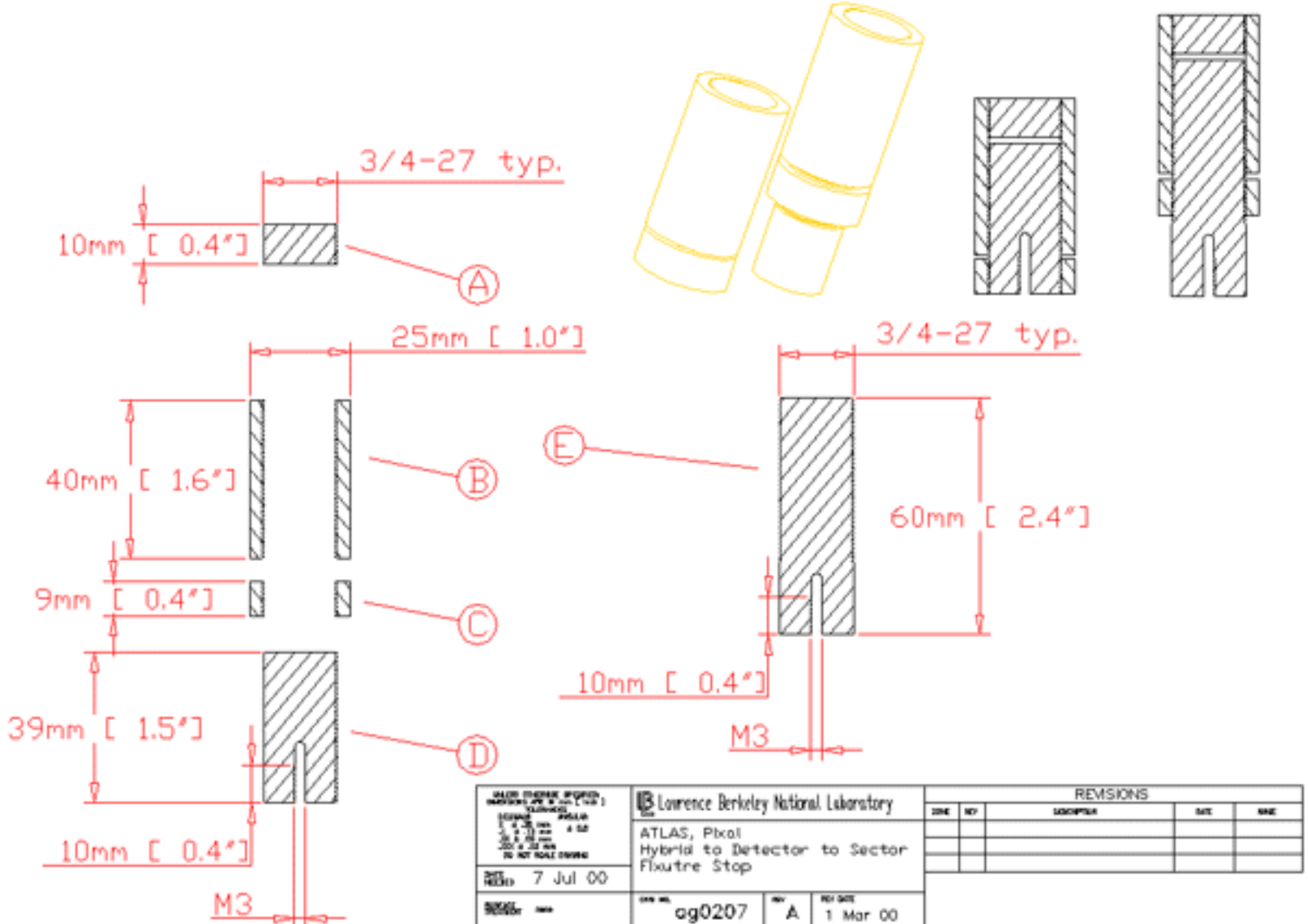

Lawrence Berkeley National Laboratory			
ATLAS, Pixel Hybrid to Detector to Sector Fixutre Stop			
7 Jul 00			
	ag0207	A	1 Mar 00
	Fred Goozen		510 486 6924
	1 Mar 00		510 486 5401
	22 Jun 00		FRGoozen@lbl.gov
	Brass		p1ap31

PART	NO. REQ'D
A	12
B	12
C	12
D	8
E	4

REVISIONS

ZONE	REV	DESCRIPTION	DATE	NAME