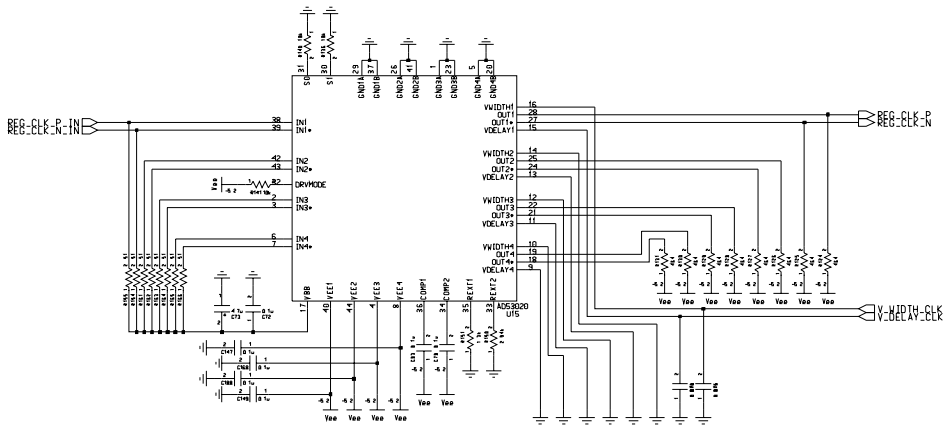

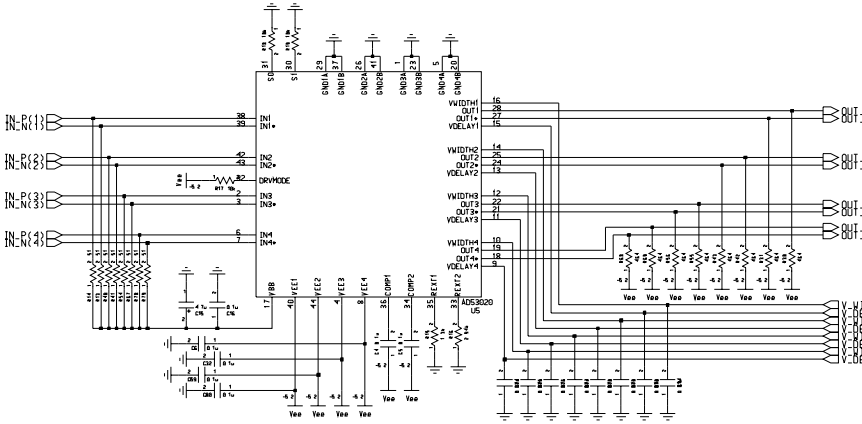

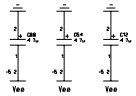

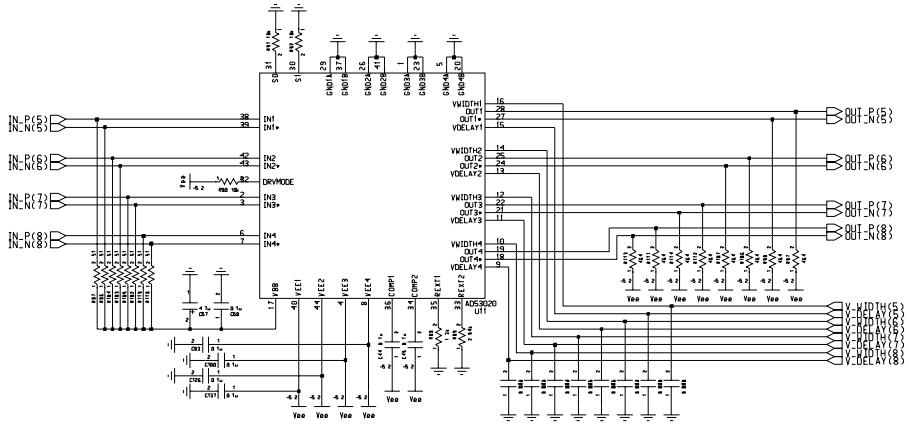

Engineer: H. Yaver	Berkeley National Laboratory 1 Cyclotron Road Berkeley, CA 94720					
Drawn by: H. Yaver						
Revised: H. Niggli	TITLE: Delay Circuitry					Size: D
DOC CTRL CHK:						8 1 5 A
MFG CTRL CHK:						
Changed by: niggli	Date Changed: Sunday, December 5, 1999	Time: 3:05:37 pm	QA CHK:	REV	Drawing Number:	Page: 1